KONA LH

Models: LHe and LH

Installation and Operation Guide

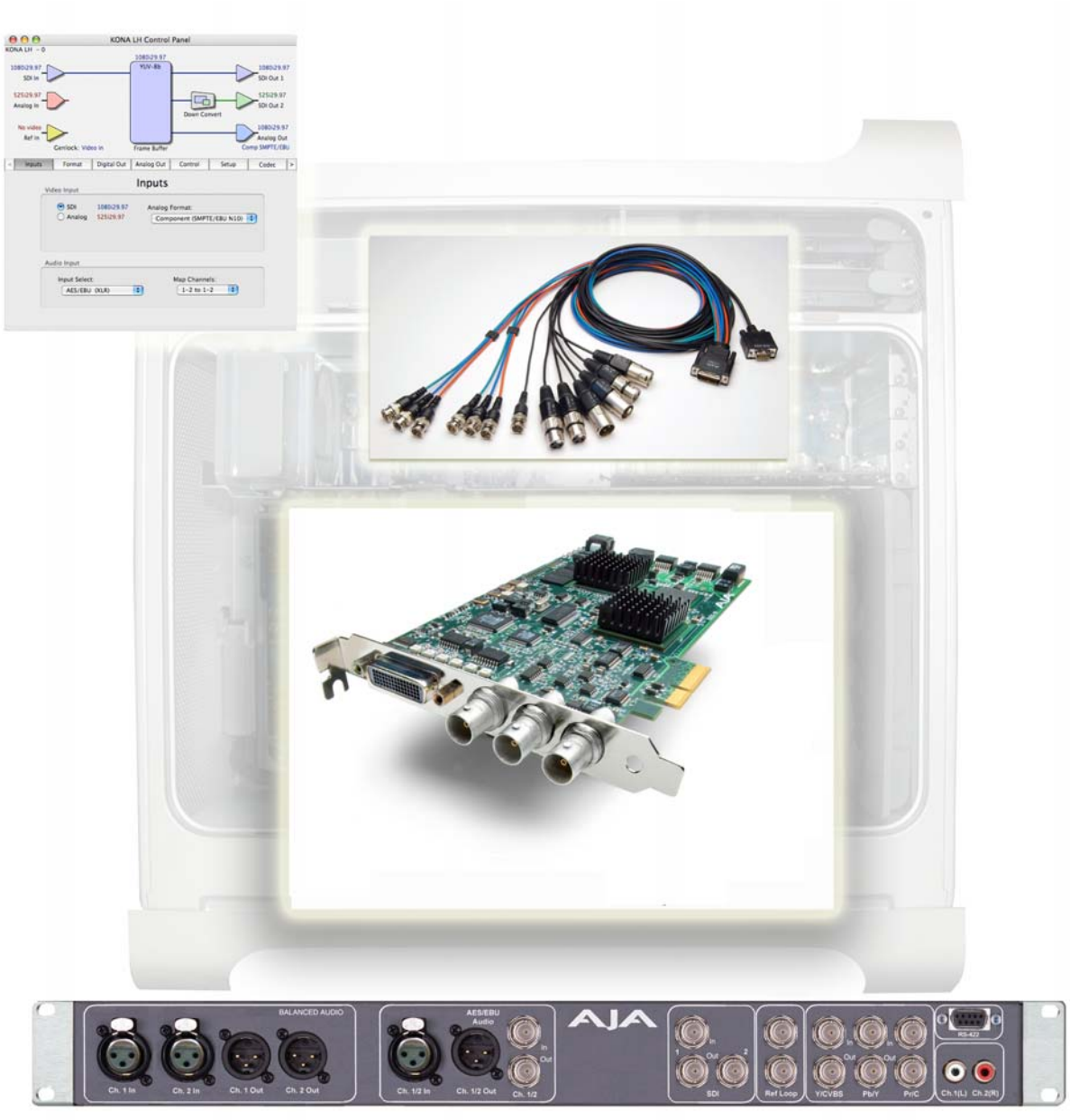

May 31, 2006 P/N101658

Trademarks

AJA, KONA, XENA and Io are trademarks of AJA Video, Inc.

Apple, the Apple logo, AppleShare, AppleTalk, FireWire and Macintosh are registered trademarks of Apple Computer, Inc. Final Cut Pro, QuickTime and the QuickTime Logo are trademarks of Apple Computer, Inc. DVCPRO HD® is a registered trademark of Panasonic Inc.

All other trademarks are the property of their respective holders.

Notice

Copyright © 2005 AJA Video, Inc. All rights reserved. All information in this manual is subject to change without notice. No part of the document may be reproduced or transmitted in any form, or by any means, electronic or mechanical, including photocopying or recording, without the express written permission of AJA Inc.

FCC Emission Information

This equipment has been tested and found to comply with the limits for a Class A digital device, pursuant to Part 15 of the FCC Rules. These limits are designed to provide reasonable protection against harmful interference when the equipment is operated in a commercial environment. This equipment generates, uses and can radiate radio frequency energy and, if not installed and used in accordance with the instruction manual, may cause harmful interference to radio communications. Operation of this equipment in a residential area is likely to cause harmful interference in which case the user will be required to correct the interference at his own expense. Changes or modifications not expressly approved by AJA Video can effect emission compliance and could void the user's authority to operate this equipment.

Contacting Support

To contact AJA Video for sales or support, use any of the following methods:

443 Crown Point Circle, Grass Valley, CA. 95945 USA

Telephone: 800.251.4224 or 530.274.2048
Fax: 530.274.9442

Web: http://www.aja.com
Support Email: support@aja.com
Sales Email: sales@aja.com

When calling for support, first read the Chapter on *Troubleshooting* at the back of this manual. You can often save time and effort by looking there first for simple remedies and information on how to get support from AJA and Apple Computer Inc.

Limited Warranty

AJA Video warrants that this product will be free from defects in materials and workmanship for a period of three years from the date of purchase. If a product proves to be defective during this warranty period, AJA Video, at its option, will either repair the defective product without charge for parts and labor, or will provide a replacement in exchange for the defective product.

In order to obtain service under this warranty, you the Customer, must notify AJA Video of the defect before the expiration of the warranty period and make suitable arrangements for the performance of service. The Customer shall be responsible for packaging and shipping the defective product to a designated service center nominated by AJA Video, with shipping charges prepaid. AJA Video shall pay for the return of the product to the Customer if the shipment is to a location within the country in which the AJA Video service center is located. Customer shall be responsible for paying all shipping charges, insurance, duties, taxes, and any other charges for products returned to any other locations.

This warranty shall not apply to any defect, failure or damage caused by improper use or improper or inadequate maintenance and care. AJA Video shall not be obligated to furnish service under this warranty a) to repair damage resulting from attempts by personnel other than AJA Video representatives to install, repair or service the product, b) to repair damage resulting from improper use or connection to incompatible equipment, c) to repair any damage or malfunction caused by the use of non-AJA Video parts or supplies, or d) to service a product that has been modified or integrated with other products when the effect of such a modification or integration increases the time or difficulty of servicing the product.

THIS WARRANTY IS GIVEN BY AJA VIDEO IN LIEU OF ANY OTHER WARRANTIES, EXPRESS OR IMPLIED. AJA VIDEO AND ITS VENDORS DISCLAIM ANY IMPLIED WARRANTIES OF MERCHANTABILITY OR FITNESS FOR A PARTICULAR PURPOSE. AJA VIDEO'S RESPONSIBILITY TO REPAIR OR REPLACE DEFECTIVE PRODUCTS IS THE WHOLE AND EXCLUSIVE REMEDY PROVIDED TO THE CUSTOMER FOR ANY INDIRECT, SPECIAL, INCIDENTAL OR CONSEQUENTIAL DAMAGES IRRESPECTIVE OF WHETHER AJA VIDEO OR THE VENDOR HAS ADVANCE NOTICE OF THE POSSIBILITY OF SUCH DAMAGES.

Table of Contents

Trademarks ii
Notice ii
FCC Emission Information ii
Contacting Support ii
Limited Warranty iii

Chapter 1: Introduction
Overview 1
LH and LHe Models 1
Features 2
Hardware 2
KONA LH Audio 2
Software 3
What's In The Box? 3
System Requirements 5
Minimum and Recommended System and Software Requirements 5
Understanding Disk Storage Methods 6
About RAIDs 7
Software For Striping 8
AJA KONA LH and Xserve RAID 8
Storage capacity 8
Cable Connections 10
Using the Breakout Cable and 3 BNCs 10
Using KL-box 11
About BNC Connectors 11
Connector Descriptions—Cables and KL-box 12
SDI Input and Outputs 12
2 Channel Digital AES/EBU Audio Inputs And Outputs 12
Analog 2 Channel Balanced Audio 12
Analog 2 Channel Unbalanced Audio (KL-box only) 12
RS422 Machine Control 12
Analog Monitor Out (Component/Composite HD/SD) 12
Reference Video 13
In This Manual 13

Chapter 2: Getting Started—Workflow
KONA LH And Your Workflow 17
Understanding Typical Workflows 18
PhotoJPEG 19
DV (DV25) 19
DV50 19
DVCPRO HD 19
HDV 20
Uncompressed 8-bit 21
Uncompressed 10-bit 21
Mixing and Matching Formats in Final Cut 21

Chapter 3: Installation
Installation Overview 23
Unpacking 24
Shipping Box Contents 24
Installing the KONA LHe Card 25
Installing the KONA LH Card 27
Cabling the System 29
System Video/Audio Cable Connections 29
System Cabling When Using The Breakout Cable 29
Typical System 30
Installing KONA LH Software 31
Software Installation Procedure 31
Genlock and Your System 36

Chapter 4: Final Cut Pro and Other Application Software
Final Cut Pro 39
Using The KONA LH Control Panel 39
Control Panel Basics 40
Input Screen 43
Input Screen Settings 43
Proc Amp Screen 44
Formats Screen 45
Format Screen Settings 46
Digital Out Screen 47
Digital Out Screen Settings 47
Analog Out Screen 49
Analog Out Screen Settings 49
Control Screen 50
Control Screen Settings 50
Playback Timing (greyed-out when in Input Passthrough) 52
DS Keyer 53
Setup Screen 55
Setup Screen Settings 55
Codec Screen 56
Codec Screen Settings 56
Timecode Screen 58
Timecode Screen Settings 58
Info Screen 59
Saving Your Control Panel Presets 60
Who is Controlling KONA LH? 61
QuickTime Application—1st Priority 61
Mac Desktop Video—2nd Priority 62
KONA Control Panel—3rd Priority 63
Control Recommendations 64
Easy Setups for Typical Uses 64
Easy Setups Menu 65
Easy Setups For Use With KONA LH 67
Audio/Video Settings Menu 68
To Create A New Easy Setup 69
The Sequence Presets Window 70
Checking the System with a Simple Test Project of Bars and Tone 77
Using 8-bit Versus 10-bit Video 80

Chapter 5: Troubleshooting
If You Run Into Problems 81
Updating Software 82
Support 83
Apple Resources 83

Appendix A: Specifications
Appendix B: Glossary

Index Index1

KONA LH

Models: LH and LHe

Chapter 1: Introduction



Overview

The AJA KONA LHe and LH bring the highest quality HD, SD and analog video/audio to an Apple G5 Power Mac running Final Cut Pro 5 software. (For readability this manual refers throughout to the LHe and LH as "LH".) KONA LH digital and analog interfaces are very high quality. KONA LH supports 8 and 10 bit uncompressed video, DV25 and DV50 using the DVCPRO codec, and JPEG—all on an Apple Power Mac G5. DVCProHD, HDV, and Apple RT Extreme are all supported—and even accelerated by onboard hardware. And KONA LH is the only capture board available that supports analog HD. Using superb 12 bit video A/D and D/A converters, analog formats like BetaCam SP also look excellent. In addition to high quality video, KONA LH also supports balanced analog, AES/EBU, and embedded audio I/O, all at 24 bits and 48Khz. For simplified system integration, KONA LH includes hardware sample-rate conversion for AES inputs (eliminating annoying synchronization hassles)—and RS-422 machine control.

LH and LHe Models

The KONA LH and LHe models both provide the same power and functionality, but differ in their bus interfaces. The KONA LHe offers a PCI Express interface for use with the latest Apple Power Macs. The KONA LH is a PCI card that plugs into a G5 chassis. Both models work with Final Cut Pro and other applications to provide a professional editing suite, corporate/industrial video center, or high-powered desktop video setup. And for even easier connectivity, an optional KL-Box rack mountable breakout box can be purchased for either model —it ships with its own cable set.

This manual covers the installation and operation of both KONA LHe and LH models and discusses using them with Final Cut Pro and other applications. Instructions for installing the KL-Box are shipped with the KL-Box.

Features

For ease of discussion, the text in this manual refers to both the LH and LHe models as "KONA LH", except where differences are specifically noted.

The KONA LH card offers a large number of unique features for optimum quality, ease of use, and support for a wide variety of workflows and environments. KONA LH provides flexible standard definition and high definition capture and playback, a hardware downconverter for working in mixed SD/HD environments—and it supports both analog and digital audio/video I/O.

Hardware

- 10-bit uncompressed SD/HD QuickTime capture card
- 12-bit HD Analog Component I/O
- 12-bit SD Analog Component/Composite/S-Video I/O
- 10-bit hardware HD-to-SD downconversion
- DVCProHD hardware acceleration
- HDV hardware acceleration
- Dynamic RT Extreme hardware acceleration
- SDI or HD-SDI Input, 2 independent SDI/HD-SDI outputs
- 2-channel analog balanced XLR audio I/O
- 2-channel AES XLR audio I/O
- 8-channel SDI embedded audio I/O
- HD/SD genlock on analog video inputs
- RS-422 Machine Control
- Final Cut Pro 5, Motion, After Effects, Combustion, and more
- Cables standard
- Optional KL-box Breakout Box—provides rack mounting and flexible easy I/O (KL-box cabling is included with the KL-box). When ordering, specify a KL-box for the KONA LH since it uses a unique cable—the KONA LH also can be used with the KL-Box but uses a different cable.
- 3-year warranty

KONA LH Audio

KONA LH supports 2-channel 24-bit 48kHz AES audio via XLR connections, and 8 channel embedded 24 bit 48kHz audio over the same single SDI connection as the video. If you are using a digital deck—you'll have the proper connections to the deck.

For analog audio, KONA LH provides two-channel balanced audio input and output. If you purchase the optional KL-Box breakout box, you also get two-channel unbalanced audio output (RCA jacks).

KONA LH also features AES input sample rate conversion; this feature eliminates the requirement for audio source synchronization. Sample rate converters auto-lock to any AES input, 32-96KHz, and then convert it to 24 bit 48KHz audio, perfectly locked to internal KONA LH video. Sample rate conversion is done at very high quality (over 120db THD).

Software

- KONA LH control panel for source selection and controlling KONA LH within the overall MacOS environment (Macintosh Desktop, Input Pass through, and more).
- AJA QuickTime™ drivers for tightly integrated hardware/software operation.
- Supports all popular standard definition formats: 8/10 bit uncompressed, JPEG, DV25/50, and 3:2 pulldown for 24Hz support.
- Support for Apple Final Cut Pro™ (application software not included).
- Support for After Effects, Combustion, Motion, and Other Applications (application software not included).

AJA's KONA LH software and hardware were developed for use with Final Cut Pro for powerful integrated video/audio capture, editing, and video production. With an Apple G5, FCP, and KONA LH, you have an ideal high-quality cost-effective system for standard definition, high definition, and analog video production workflows. Software is supplied on CD, including the KONA LH Control Panel, drivers for the card itself, and all files necessary for Final Cut Pro and other application support (Final Cut Pro software application not included).

What's In The Box?

When you unpack your AJA KONA LH/LHe, you'll find the following components:

- AJA KONA LH Software and Documentation CD-ROM—this CD contains the software installer to place KONA LH drivers and the Control Panel on an Apple Power Mac. Install the software as discussed in this manual in *Chapter 3: Installation and Configuration.* The CD also contains a wide variety of useful information, including this manual you're reading (PDF format).
- KONA LHe PCI Express card or KONA LH PCI 66/64 card, depending on the model you ordered.

- Cable, KONA LH Standard Breakout, with Analog video, audio, AES, Reference Input, and RS-422 Machine Control. SD-SDI and HD-SDI In/Out connectors are on the LH card itself.
- Read Me First Notice—Contains late-breaking news and/or errata related to KONA LH and the documentation.
- Registration Sheet—allows you to register your card by mail or online (details provided).

Please save all packaging for shipping the KONA LH should you wish to do so when moving or sending it in for service.

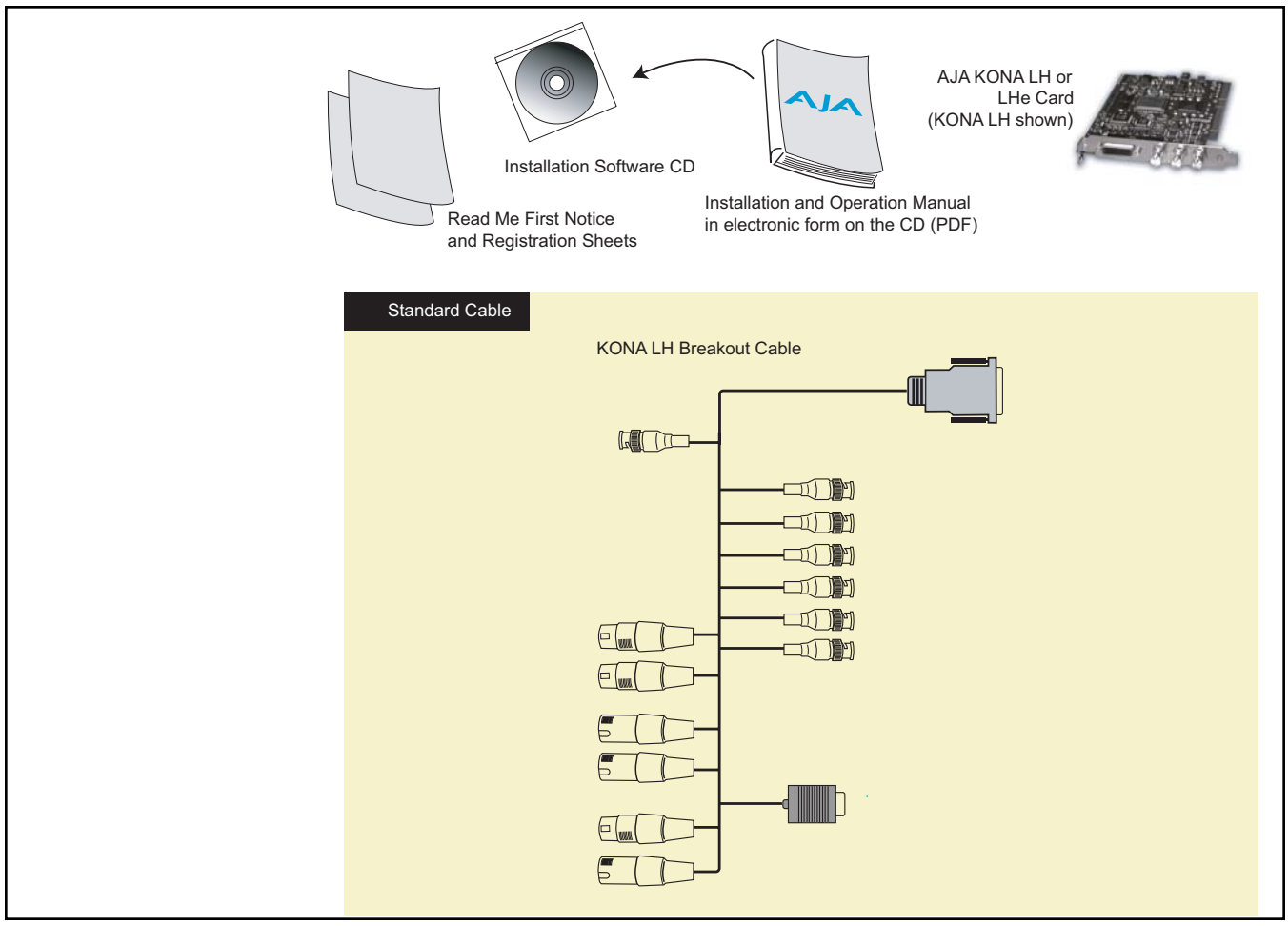

KONA LH Shipping Box Contents

System Requirements

AJA Video recommends that your system meet minimum hardware and software requirements to achieve a satisfactory level of performance when operating it. Here, we provide minimum and recommended requirements and then discuss disk storage issues that should be understood for proper system configuration.

Minimum and Recommended System and Software Requirements

The following table outlines the system hardware and software needed.

Item	Minimum	Recommended
Macintosh Operating System	OS X, version 10.4, QuickTime 7	OS X latest release. QuickTime 7 or Latest
Editing/Production Software Suite	Final Cut Pro 5HD	Final Cut Pro Studio
Macintosh	**Model KONA LHe Minimum:** Power Mac G5 (dual) PCI-Express 2GHz with 1GB or more RAM **Model KONA LH Minimum:** Power Mac G5 (dual) 1.8GHz with 1GB or more RAM PCI 66/64 slot required (PCI-X slot required)	**Model KONA LHe Recommended:** Power Mac G5 PCI-Express (dual) 2.3 GHz or Quad 2.5GHz with 1GB or more RAM **Model KONA LH Recommended:** Power Mac G5 (dual) 2.5 GHz or better with 1GB or more RAM (PCI-X slot required)
Internal Storage (inside Mac) For DV only; uncompressed SD requires external RAID.	SATA (1 internal HD)	SATA (2 internal HDs RAIDed)
RAID Interface	Fibre Channel or SCSI	Fibre Channel or SCSI
Disk Storage ***Note:*** see Storage Methods topic that follows later in this Chapter	4 SCSI Hard Drives External RAID	Apple Xserve RAID

Understanding Disk Storage Methods

The KONA LH card, an Apple Power Mac, and Final Cut Pro, together offer an unprecedented level of features and performance for all Video/Audio production applications. However, to ensure performance and quality, the disk storage system used with the Apple Power Mac must be able to meet the demands of storing realtime uncompressed media. At the very minimum, the disk storage system must be able to provide and maintain a consistent 50 MB/s transfer rate from the Power Mac to disk (read/write). There are a variety of system configurations and peripherals that can provide this level of performance. Possible system configurations are listed following:

Storage Method	Features/Limitations	Cost
Xserve RAID	Features up to 14 ATA/100 drive channels, dual independent RAID controllers, and a dual 2Gb Fibre Channel host interface. Xserve provides up to 5.6TB of storage with throughput of up to 400 megabytes per second.	Expensive, although the cost per gigabyte is excellent when large storage is needed
External ATA/IDE or SCSI RAID	Scalable. Performance almost as good as Xserve, although it can be more complex to set up and maintain. Many vendors offer solutions (too many to list here; check with your Apple dealer for SCSI Storage solutions for details). Although the connection to the external RAID chassis is SCSI, the drives themselves may be SCSI or ATA. A pure SCSI array will offer higher performance at a higher cost.	Moderately Expensive

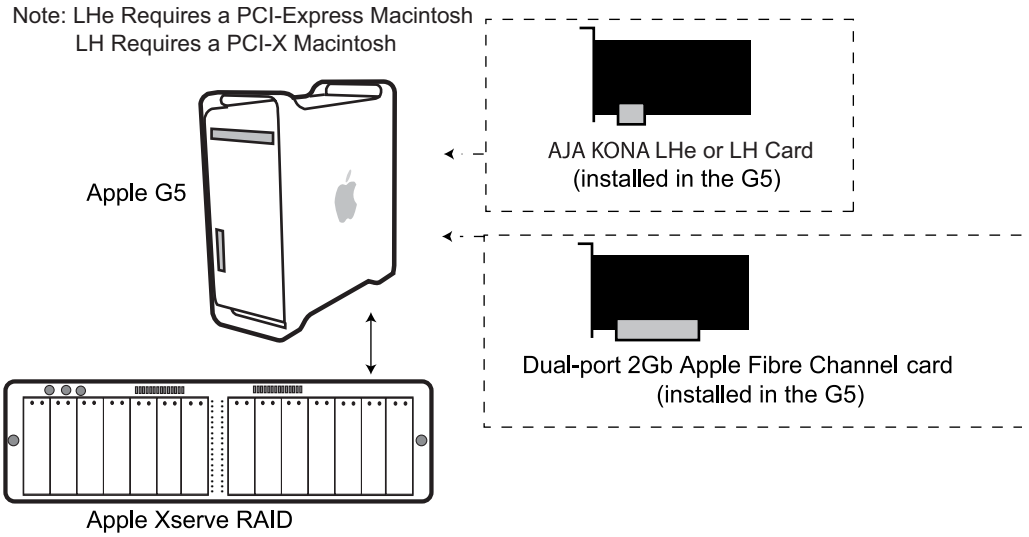

Disk Storage Solutions—G5 With Xserve RAID

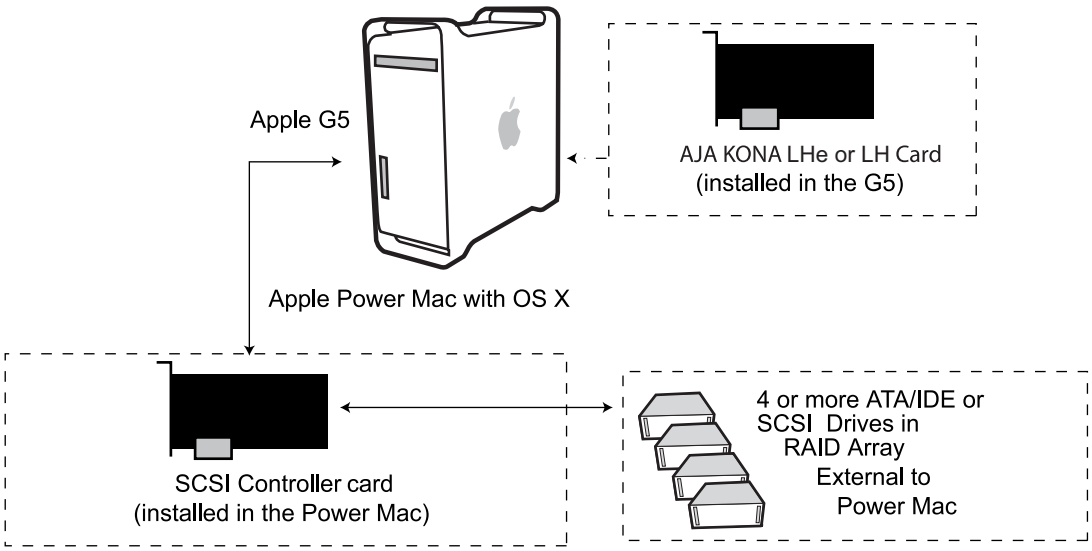

Disk Storage Solutions—External ATA/IDE or SCSI RAID

About RAIDs

Redundant Array of Independent Disks, or RAID, is a group of hard drives that appears to the host Power Mac as a single high-speed storage unit. RAID systems enable you to increase storage capacity and get the performance, reliability, and data protection needed for video production, but not possible from a single hard drive. RAID drives inside the array operate simultaneously, increasing overall throughput. RAID technology is comprised of these techniques (some or all):

- Striping data across multiple drives for storage performance (RAID 0).
- Mirroring for redundancy (RAID 1).
- Parity for data protection (RAID 5 [plus others]).

Most RAID configurations, or RAID levels, combine these to provide a balance of protection and performance.

Striping divides a logical drive into data blocks, or stripes, that are distributed across an array of physical drives. Striping a set of disks improves storage performance because each drive operates concurrently. However, striping alone, known as RAID level 0, offers no data protection.

Mirroring involves writing identical copies of all data to a pair of physical drives. This results in very high data reliability: If one drive fails, the data is still available on the remaining disk drive. However, it also results in a storage efficiency of only 50 percent, because two physical drives are required to achieve a single drive's capacity. Mirroring alone is known as RAID level 1.

Parity provides data protection without requiring complete duplication of the drive contents. In the event of a drive failure, parity information can be used with data on surviving drives to reconstruct the contents of a failed drive. Parity data can be stored on a dedicated drive, as in RAID 3, or distributed across an array of drives, as in RAID 5. Parity provides much greater storage efficiency than mirroring—up to 85 percent for a set of seven drives.

Software For Striping

AJA recommends the Disk Utility software provided by Apple with OS X for creating and striping RAIDs, including 3rd-party, SCSI, and Xserve RAIDs. It is very easy to use and has been tested to work well. The utility can be found in *Macintosh HD/Applications/Utilities,* where *"Macintosh HD"* is the name of the system drive.

AJA KONA LH and Xserve RAID

For the optimum in disk storage with Final Cut Pro 5HD and AJA KONA LH, we recommend Apple's Xserve RAID. Xserve RAID holds up to 14 hot-swap Apple Drive Modules—5.6TB of storage—in a rack-optimized 3U enclosure. Each 7200-RPM hard drive connects to a dedicated ATA/100 drive channel, eliminating a traditional source of bottlenecks and maximizing the 2Gb/s Fibre Channel host connection(s). By adding more Xserve RAID systems, you'll have very large expansion capabilities: A standard 42U rack can hold over 78TB of Xserve RAID storage.

Xserve RAID is designed for nonstop operation. Redundant hot-swap power and cooling modules allow the system to keep functioning even if one module fails. A high-availability architecture and dual independent RAID controllers support RAID levels 0, 1, 3, 5, and 0+1. In addition, Xserve RAID supports hybrid RAID levels 10, 30, and 50 when used in conjunction with host-based software RAID. Remote Xserve RAID management capabilities are provided via Apple's Java-based RAID Admin application.

Note: When creating and striping an Xserve RAID for KONA LH using the Apple Disk Utility provided with OS X, use *RAID 50*: in other words, the internal Xserve RAID drives are set up as RAID 5; the Xserve RAID then shows up in Disk Utility as two drives (regardless of the number of internal drives) which must be configured together as RAID 0. Apple calls this configuration "RAID 50."

Storage capacity

No matter which storage system you choose, pick one that can scale to meet your needs over time. Ideally, you should be able to increase storage capacity or switch to a RAID level offering increased data protection in the future. Balance current and future storage needs with your budget and choose accordingly.

FORMAT	Transfer Rate in MB/sec	Storage Requirement in GB/Hour	Hours of Storage Per Terabyte of Disk
10 bit Uncompressed Standard Definition	28	101	9.9
8 bit Uncompressed Standard Definition	21	76	13.1
DV50 Standard Definition	6.3	23	43.4
DV25 Standard Definition	3.1	11	90.0
Photo JPEG Standard Definition	2.5	9	111
8-bit Uncompressed 1080i @59.94/60Hz	124	448	2.2
10-bit Uncompressed 1080i@59.94/60Hz	166	597	1.7
8-bit Uncompressed 1080i @50Hz	104	373	2.7
10-bit Uncompressed 1080i@50Hz	138	498	2.0
8-bit Uncompressed 1080psf@23.98/24Hz	100	358	2.8
10-bit Uncompressed 1080psf@23.98/24Hz	133	478	2.1
8-bit Uncompressed 720p@59.94/60Hz	100	358	2.8
10-bit Uncompressed 720p@59.94/60Hz	133	478	2.1
DVCPRO HD	12.5	45	22.2
MB = MegaBytes *GB = GigaBytes*			

for uncompressed formats, PAL and NTSC transfer rates and storage requirements are about the same because PAL has a lower frame rate, but more lines.

Cable Connections

KONA LH offers unsurpassed cable connectivity for a video/audio capture card. Connections are made via a supplied breakout cable and three BNCs on the KONA LH Card endplate.

Using the Breakout Cable and 3 BNCs

The breakout cable supports:

- Reference Input (BNC)
- Component/Composite/S Video Input (3x BNC)
- Component/Composite/S Video Output (3x BNC)
- AES In (2x XLR)
- AES Out (2x XLR)
- Balanced Audio In (2x XLR)
- Balanced Audio Out (2x XLR)
- RS-422 Machine Control (9 pin D)

The three BNCs on the KONA LH Card endplate additionally provide:

- Standard and High-definition SDI input (BNC)
- 2 SDI outputs (2x BNC, independent outputs)

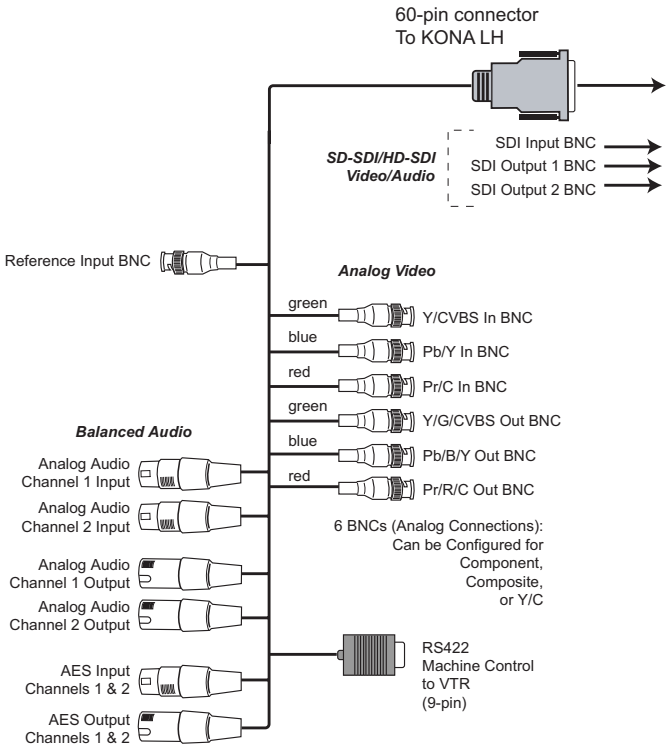

KONA LH Breakout Cable

Using KL-box

The KL-box attaches to the KONA LH card via cables that attach to the back of the KL-box. These cables are supplied with the KL-Box (one 60-pin to 60-pin, and one 3-BNC to 3-BNC). When you purchase the optional KL-Box, you get two-channel unbalanced audio output (2 RCA Jacks)—not available with the standard cable.

Note: When ordering a KL-Box, ensure that you specify one configured for the KONA LH/LHe. The KL-Box is also available for the KONA LS and LSe, but uses a different cable set when ordered for the LS card. Separate AJA part numbers exist for each configuration, so ensure your dealer supplies you with the correct one.

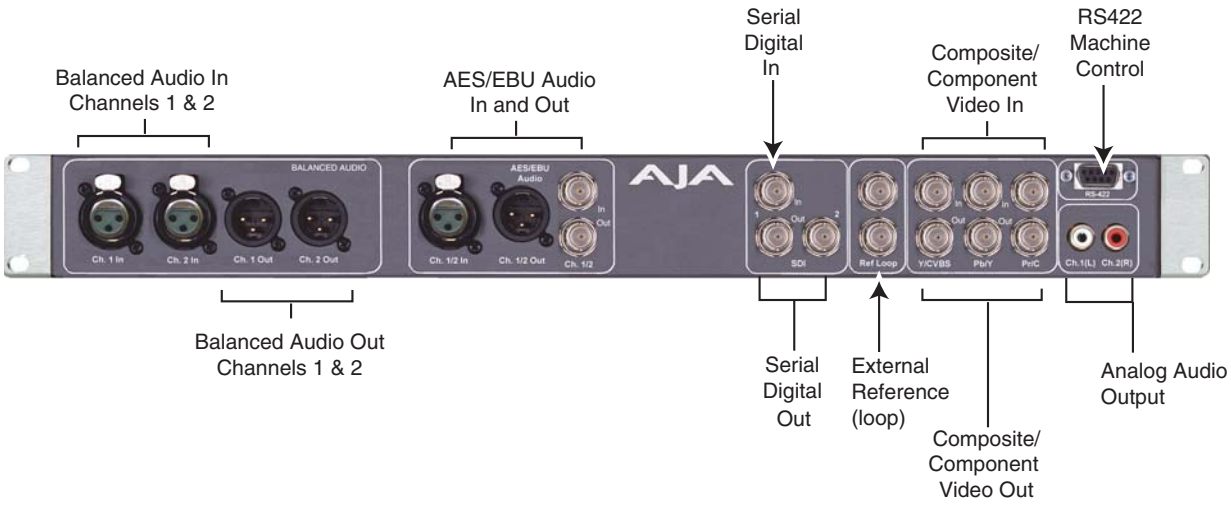

AJA KL-box Panel Connectors

About BNC Connectors

Although most video professionals are used to BNC connectors, you may not have seen them if you've been using primarily desktop video equipment. BNC connectors ensure a positive connection by the act of locking the connectors together via pins in one connector that fit into slots in the corresponding connector.

To make a BNC connection, slide the cable connector over the panel connector and then when seated, rotate the barrel of the cable connector 90° clockwise until the connectors are locked together. When properly locked, the cable cannot accidentally be pulled out.

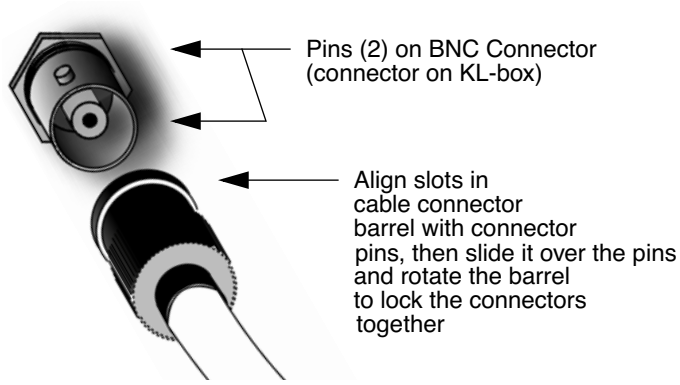

Connector Descriptions—Cables and KL-box

Connectors on the standard cable set are labelled as to their function for easy installation and maintenance. Similarly, connectors on the optional KL-box are also labelled.

SDI Input and Outputs

BNC connectors are provided on the KONA LH card endplate for one SD-SDI or HD-SDI input and two SDI outputs (independent of the input). The SDI input and outputs support video and embedded 24-bit digital audio. Use SDI wherever possible for the best quality 10-bit uncompressed video input, capture and output. If peripheral equipment has a variety of inputs/outputs, look to see if it has SDI I/O, and use it where possible. Most high-end professional broadcast equipment supports SDI (VTRs, cameras, media storage servers, etc.).

2 Channel Digital AES/EBU Audio Inputs And Outputs

One female XLR connector is provided for the channel 1 and 2 inputs, while a male XLR connector carries channel 1 and 2 outputs. AES/EBU signals are handled internally as 24-bit digital.The optional KL-box also provides XLR audio connections on the front panel.

Note: AES XLR connections are digital and cannot be used with analog equipment having XLR connectors.

Analog 2 Channel Balanced Audio

Two sets of analog XLR connectors, one for each channel, support balanced audio connections. Male XLRs are provided for outputs and female XLRs are provided for inputs. Balanced audio (differential) connections provide better analog audio quality over longer cable runs. Most professional quality VTRs and audio equipment have XLR style connectors for analog audio. Analog audio signals are converted internally to 24-bit digital.

Analog 2 Channel Unbalanced Audio (KL-box only)

On the KL-box are two analog output connectors, one for each channel. These connectors are RCA-style phono jacks.

RS422 Machine Control

A female DB9 connector on the breakout cable provides connection for VTRs, camcorders, disk media servers, and other devices using RS422 SMPTE (Sony) protocol. This connector is also present on the optional KL-box. (Connector pinout is listed in Appendix A: Specifications.)

Analog Monitor Out (Component/Composite HD/SD)

Both the standard I/O cable and the optional KL-Box feature two groups of 3 BNC connectors (each) for input and output of component, composite and Y/C functions. The signals are labelled on both the cable and KL-Box connectors.

Component video signals are generally higher quality than composite, but not as high quality as serial digital (SDI).

A Note About RGB—Although RGB is used less in today's video systems, KONA LH supports it. However, because the KONA LH (and SMPTE SDI) native format is YPbPr, AJA recommends the use of YPbPr whenever possible for analog monitoring. Although component video monitors often have RGB inputs, it's better to use YPbPr when the monitor supports it. The YPbPr format provides "headroom" for "superwhite" and "superblack"—and these video levels *will be clipped* when transcoding to RGB. Also, the RGB/YPbPr transcoding involves a level translation that results in mathematical round-off error. RGB can be configured in the KONA LH Control Panel.

A Note About YPbPr—Component Video, or YPbPr, has been given several names over time. YUV, Y/R-Y/B-Y, and YCbCr, are just some examples. Although these various formats have some differences in levels, they are all basically the same. KONA LH uses the modern YPbPr terminology exclusively. KONA LH supports three different types of YPbPr: SMPTE/EBU N10, Betacam (NTSC), and Betacam (NTSC Japan). These three formats differ in level only and are configured in the KONA LH Control Panel.

Reference Video

A single BNC on the standard KONA LH cable—or two BNC connectors on KL-box (it loops through)—allow you to synchronize KONA LH outputs to your house analog reference video signal (or black burst). If you have a sync generator or central piece of video equipment to use for synchronizing other video equipment in your studio, then connect its analog composite output here. When KONA LH outputs video it uses this reference signal to lock to. When connecting a reference video source, the locking signal should be the same format as the Primary format selected in the KONA LH Control Panel. It is possible in some circumstances to use an alternate format video signal as long as the basic frame rate is compatible.

In This Manual

Chapter 1 is the introduction you're reading, listing features, box contents, and system requirements.

Chapter 2 gets you started with using KONA LH in a typical Video environment. Typical workflows are discussed.

Chapter 3 provides complete instructions for installing and configuring the AJA KONA LH card. The user is guided through unpacking, installing the card into a PowerMac, installing KONA LH Mac Software From CD, cabling the system and then getting it up and running. Important configuration information is also provided on video settings and use of genlock/external reference.

Chapter 4 discusses operational aspects of KONA LH when used with Final Cut Pro.

Chapter 5 discusses troubleshooting problems with your system and what to do when there's a problem you can't solve.

Appendix A presents a list of technical specifications for the product.

Appendix B gives a glossary of technical terms and acronyms used in the manual.

The remainder of the manual consists of appendices listing specifications and an index section to help you rapidly find topics in the manual.

Chapter 2: Getting Started

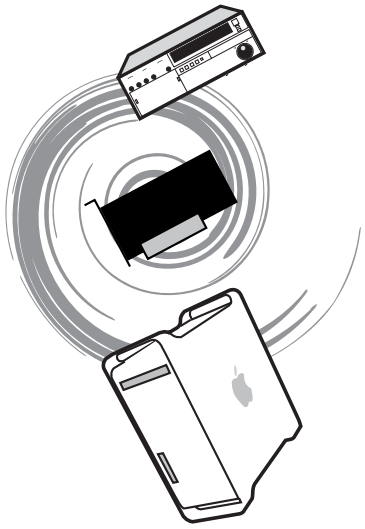

KONA LH And Your Workflow

There are a lot of ways to think about the video/audio workflow you follow. Your setup might be categorized as corporate video, professional broadcast, or desktop video. Or the workflow might be categorized by the type of equipment used rather than the nature of work produced—many systems these days are a mixture of equipment from high-end professional to desktop video. This chapter hopes to show how Final Cut Pro 5 and KONA LH can help fit into whatever workflow you currently have and make it more efficient.

A *Workflow Scenarios* diagram on the following page shows types of equipment, sorted by VTR source, and the types of workflow attributes and KONA LH applications supported. After the diagram, we also discuss some typical applications.

Source Deck Type(s)		Workflow Attributes	Applications
Digital SD-SDI or HD-SDI Examples: Digibeta, DV50, DVCPRO HD, HD Varicam and DVcam		KONA LH captures and outputs SD-SDI/HD-SDI video with embedded audio. Use high-quality AES/EBU and/or embedded 8-channel audio output.	Pro Broadcast Corporate/Industrial On-site Editing
Analog Examples: Beta, VHS, and U-matic		KONA LH captures and outputs Y/C, Component, and Composite Video, with 2-channel audio.	Corporate/Industrial Pro Broadcast On-site Editing
Digital capture via Firewire with Output via AJA KONA LH. The LH has Analog HD component in, which also allows you to bring in HD directly from an HDV camera head. Example: MiniDV, HDV	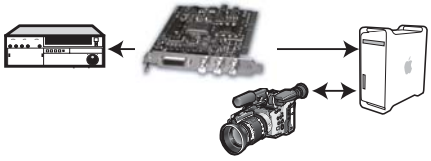	Using standard desktop video techniques, video/audio is captured directly from a camcorder or deck. KONA LH is used for playing back captured media and editing/mastering to tape or DVD using Final Cut 5 HD and other tools such as After Effects, Combustion, Apple Motion, etc. HDV playback is aided by KONA LH onboard hardware scalar.	Desktop Video Corporate/Industrial On-site Editing Pro Broadcast
Without even using a deck; use the video monitor as a second Mac monitor. The KONA LH desktop lets you drag graphics from programs like Adobe Photoshop from the computer display to the video monitor. You paint full frame and live onto a broadcast monitor. Output virtually anything to video—ideal for animators and compositors.	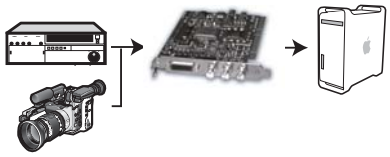	Using Final Cut Pro, work with a wide range of old and new SD and analog sources, and then also using desktop graphics and video software for creative power and flexibility.	Post-production Animation Compositing

Workflow Scenarios

Understanding Typical Workflows

KONA LH and Final Cut Pro 5 allow more workflow flexibility than ever before. Users can independently select different formats for capture and storage media, while also outputting to an array of analog and digital uncompressed formats—with all outputs active simultaneously. Capture can range from analog, DV, or SD and HD digital uncompressed. Media can be stored on disk as:

- offline quality at low bit rates
- on-line quality at moderate bit rates
- or with the highest quality as 8 or 10 bit uncompressed SD and HD

As quality and codecs improve, the lines between offline and online are blurring. For example, with the DVCPRO HD codec introduced in FCP HD, native HD editing in that codec is now possible, providing very high quality results (true HD editing) at very low data rates, in some cases as low under 6 MB sec. (compare this to 100MB/sec and higher for uncompressed HD formats, and you can immediately see the benefits)

Following are summaries of the most common workflows, listing data rates and relative quality levels. Some workflows require a RAID array and some will work using the host Power Mac's internal system drive—it's noted where this is supported in the following discussions.

PhotoJPEG

Data rate: approximately 1-3 MB/second standard definition or high definition—supported by internal system drive

Quality: Very Good

The Apple PhotoJPEG codec offers an excellent compressed media choice for on-line quality at low data rates. PhotoJPEG can use the full-raster at 4:2:2 sampling. Final Cut Pro 5 allows you to adjust quality using a PhotoJPEG control panel. KONA LH allows for PhotoJPEG monitoring and/or output in both SD and HD. KONA LH can capture from almost any HD or SD input, directly to PhotoJPEG media.

DV (DV25)

Data rate: 3.13 MB/second (megabyte/second) standard definition only—supported by internal system drive

Quality: Good

In this workflow, DV is usually input to a Power Mac running Final Cut Pro 5 through its FireWire port. DV offers good quality, but it has lower Chroma resolution when compared to DV50, JPEG, or uncompressed. You can use KONA LH to convert DV projects to uncompressed—in real time—for monitoring and/or output. Alternatively, KONA LH can capture uncompressed from any input, directly to DV media.

DV50

Data rate: 6.26 MB/second standard definition only—supported by internal system drive

Quality: Very Good

Like DV25, Final Cut Pro 5 also supports the Panasonic DV50 standard definition codec. DV50 is a 4:2:2 compressed format and therefore has higher chroma resolution when compared to DV25. Also like DV25, you can use KONA LH to convert DV50 projects to uncompressed—in real time—for monitoring and/or output. KONA LH can capture uncompressed from any input, directly to DV50 media.

DVCPRO HD

Data rate: 12 MB/second high definition—supported by internal system drive

Quality: Excellent

Like DV50, Final Cut Pro 5 also supports the Panasonic DVCPRO HD high definition codec. You can use KONA LH to convert DVCPRO HD projects to uncompressed—in real time—for monitoring and/or output. KONA LH can capture uncompressed from any input, directly to DVCPRO HD media. When playing the DVCPRO HD format back, the KONA LH hardware handles the work of properly scaling the video for monitoring and output—which provides for more streams of RT effects, since the G5 processors are freed up to handle the RT.

HDV

Data rate: 19 MB/second high definition720p, 25 MB/second high definition 1080i—supported by internal system drive

Quality: Excellent

KONA LH supports and accelerates the Final Cut Pro HDV Codec. You can use KONA LH to convert HDV projects to uncompressed—in real time—for monitoring and/or output. KONA LH can capture uncompressed from any input, directly to HDV media. The KONA LH advanced scaling engine takes the native frame (long GOP 1440 HD) and outputs it via hardware—in real time. Precision AJA circuitry re-sizes the video to proper 1920 x 1080, providing quick playback of HDV captured by Final Cut for monitoring and recording.

HDV captures HD images via MPEG2 compression and allows for recording the signal to a MiniDV tape. This MPEG2 compression is similar to a DVD (although DVD is a program stream vs. HDV's transport stream and HDV uses a constant bit rate whereas DVDs use variable bit rates). The issue for post production is that the HDV transport stream is based around a long-GOP structure (group of pictures) which produces images based on information over a section of time, via I, P and B frames; Intraframes, predicted frames and bi-directional frames. Formats that do not use this scheme treat frames as individual units, as in the progressive formats where a frame truly is a frame, or as interlaced frames where two fields create the image. Sometimes we refer to these formats in contrast to MPEG formats, as I-frame formats where frames can be easily defined as individual.

Since the frames of HDV have the long GOP structure to define them, herein lies the problem for post-production; how can we work with the material if we must know what lies before, after and during? Luckily, the transport stream MPEG2 can be transmitted over IEEE1394 (aka FireWire). This means that the compressed HD material can be transferred into systems with the appropriate hardware and software (for example, a G5 with Final Cut Pro 5). While this seems like a simple solution for post-production, it means that the footage must be brought into the system as a rather heavily compressed format and that the computer must continue to work with the material as a MPEG2 transport stream, which is incredibly processor intensive for the computer.

How does the AJA KonaLH/LHe card connect to HDV and digitize material to uncompressed HD files for editing—or at the very least, to a lightly compressed I-Frame HD format? The answer to this is provided in a feature common to many HDV devices: analog HD output via component video. The component connectors on JVC cameras and decks, along with Sony cameras and decks, allows for the output of the long GOP MPEG2 data as a standard HD video format such as 720P, as with the JVC products—or 1080i as with the Sony products.

Since the KonaLH/LHe cards have the ability to digitize analog HD signals, the analog component output of the HDV devices can simply be connected to the KonaLH/LHe inputs. Note that HD signal cannot be transported over composite or S-Video (Y/C) cables, so the HDV device must have an analog component HD output. The KonaLH/LHe also has the ability to ingest analog audio, so the analog audio outputs of the HDV devices can be sent to the Kona card as well. (Also note that these analog audio outputs on the HDV devices are usually unbalanced RCA connections where the KONA card uses balanced XLR style

connection so some sort of audio level correction device, such as a mixer or a stand alone active interface amplifier, should be used for accurately attenuated audio.)

Finally, you will want to control your device. Where all of the video, audio and timecode information moved over the FireWire cable, now you are dividing those tasks. Device control is the most difficult to configure for HDV devices because so few HDV devices have implemented any form of device control other than IEEE1394. The one notable exception is the JVC BR-HD50 HDV deck which has a remote serial port for RS422 protocol and device control. Check the KONA LH/LHe support area on the AJA website for a whitepaper on HDV, which gives details on using KONA LH/LHe with various HDV equipment.

Uncompressed 8-bit

Data rate: 21 MB/second standard definition, or 100-124 MB/second high definition (see later "Storage Capacity" chart in Chapter 1 for the various transfer rates per format)—requires SCSI, Fibre Channel, or ATA drive array

Quality: Excellent

Uncompressed media is KONA LH's native storage format, offering the highest quality available. Capturing in uncompressed results in no compression artifacts, and video is sampled over the full raster at a 4:2:2 rate.

Using uncompressed maintains a higher quality in your project from capture all the way through effects rendering. Final Cut Pro 5 supports RT with uncompressed media using RT Extreme. KONA LH supports capture of uncompressed through any of its inputs, and uncompressed projects are output to all of its outputs simultaneously.

Uncompressed 10-bit

Data rate: 28 MB/second standard definition, or 133-166 MB/second high definition (see later "Storage Capacity" chart in Chapter 1 for the various transfer rates per format)—requires SCSI, Fibre Channel or ATA drive array

Quality: Excellent, very high quality

Offering all the benefits noted previously for 8-bit uncompressed, 10-bit additionally offers the very highest quality available. With 10-bit media and Final Cut Pro 5's 32 bit Floating Point YUV Codec, video quality is second to none. For more information on this subject, please see the topic at the end of Chapter 4: *Installation and Configuration*, titled "Using 8-bit Versus 10-bit Video."

Mixing and Matching Formats in Final Cut

In Final Cut Pro, it works best to use one format consistently. For example, if you capture DV 50 files and then capture 8-bit uncompressed files, you'll have to rerender one or the other when using the two types on the same Final Cut *sequence* (the timeline where media is edited into a project). You could even capture 8-bit uncompressed and HDV, and then place them both on a PhotoJPEG timeline and end up having to render them *both*. You can capture directly, in real time to any supported format, even if it doesn't match the source formats at all (for example, DV and DV50 to 8 bit uncompressed).

Therefore, it makes sense to capture media into your system at the highest quality you'll expect to use to eliminate rerendering and ensure best results. KONA LH is ideal for this since it has the connections necessary to bring in a variety of media for capturing into Final Cut.

Chapter 3: Installation & Configuration



Installation Overview

The installation and set up of a KONA LHe/LH is very simple. All of the steps of installation and configuration are documented in this chapter, summarized as follows:

1. Unpack the shipping box
2. If not previously installed on your Power Mac, ensure that Final Cut Pro is installed as detailed in its user documentation. Final Cut Pro 5 *must be installed and have been run at least once prior to installing AJA KONA LH software.*
3. For Model LHe:
   Lay the PCIe PowerMac G5 on it's on it's side (motherboard facing up). Install the KONA LHe capture card into one of the PCI Express slots in the PowerMac. The RAID controller card (SCSI or Fibre Channel) can go in any other available slot.

   For Model KONA LH:
   Lay the PCI-X PowerMac G5 on it's side (motherboard facing up). Install the KONA LH capture card into one of the 100 MHz slots in the PowerMac and put your RAID controller card (SCSI or Fibre Channel) in the PCI-X 133 MHz slot.

4. Install AJA KONA LH software on your Power Mac from the supplied AJA CD-ROM
5. Cable the system audio and video sources, VTR, audio monitor, and video monitor. If you purchased the optional KL-box, then install it into an equipment rack or place it on a desk and connect its two cables to the KONA LH card. If you're instead using the standard cable set, then use those to connect equipment.

Each of these steps are explained in greater detail in the remaining pages of this chapter.

Unpacking

Shipping Box Contents

KONA LH is shipped with a CD containing system software and an Installation and User manual (a PDF on the CD), and a cable. If you purchased the optional KL-box breakout box, it ships with its own set of cables and instructions for connection to the KONA LH card.

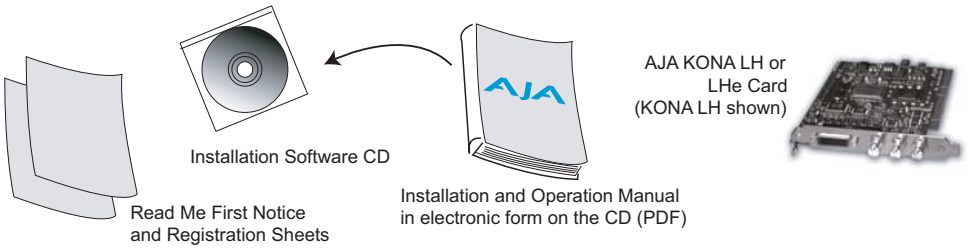

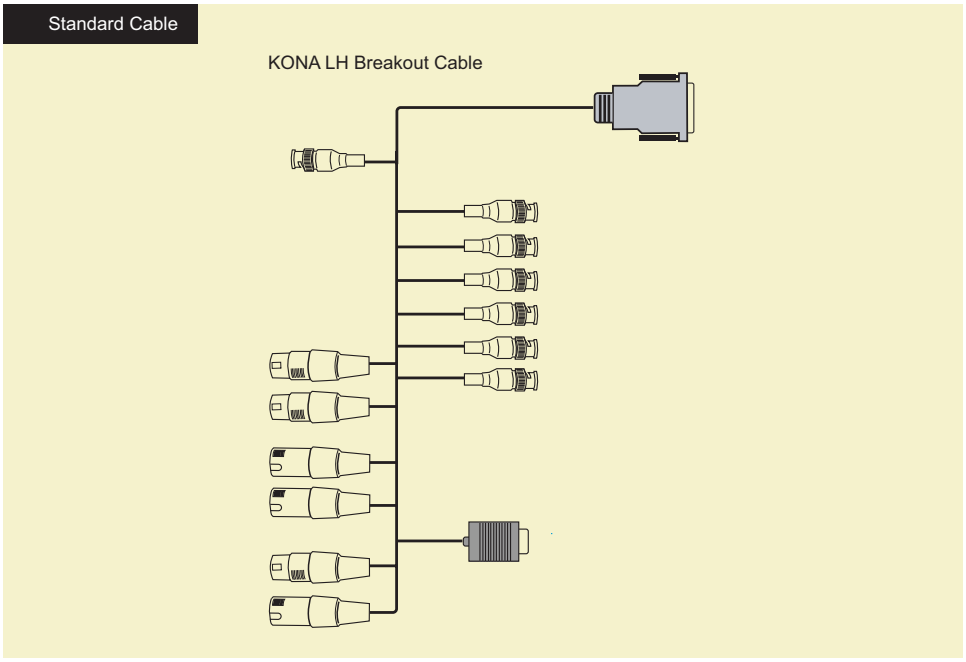

Contents, KONA LH Shipping Box

As you unpack the shipping box(es), carefully examine the contents. Ensure you received everything and that nothing was damaged during shipment. If you find any damage, immediately notify the shipping service and supply them with a complete description of the damage. AJA will repair or replace damaged items. If you find shipping damage, contact your AJA dealer or distributor for details on how to have your KONA LH repaired or replaced.

Note: Save packing materials and the shipping box. If you ever require service or move your system—use the packaging materials and box for safe shipment.

Installing the KONA LHe Card

1. Place the PCI-Express G5 in a well-lit convenient area, where you will have easy access to the chassis access door.
2. Using your hand, touch the outside of the G5 to discharge any static electricity you have. Remove the power cable from the back of the PowerMac G5.
3. Remove the access door and clear inner panel as described in your Apple G5 User Manual. Lay the G5 on its side, motherboard facing up.
4. Remove the KONA LHe card from its protective anti-static bag; place the card on top of the bag.
5. Visually locate the PCI-Express slots inside the G5 chassis (photo shown on the following page). The KONA card only requires a 4-lane PCI-Express slot, so any of the available slots will work correctly.
6. Remove the card edge access cover from the desired slot where you will be inserting the KONA LHe card. The card edge cover is secured by a phillips screw; save this screw for use in installing KONA LHe.
7. Holding the KONA LHe card by the card edge plate and an outside edge, carefully insert the KONA LHe card by rocking it slowly into the slot. Ensure the card edge aligns properly with the G5's opening (where the card edge cover was just removed) and that it is fully seated in the slot.
8. Secure the card in the slot using the screw removed earlier.
9. Replace the G5's clear inner panel and outer access door.



KONA LHe Card



To Install:

1. Remove Screw and Cover Plate and Insert KONA LHe Card
2. Secure KONA with Screw Removed Earlier

PCI-Express Slots

PowerMac G5 Cardcage Access

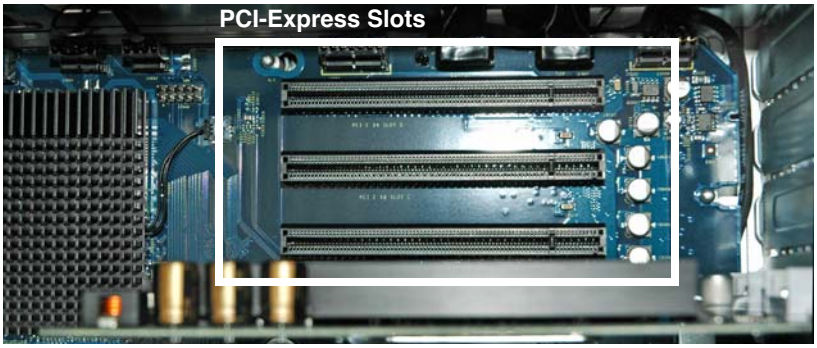

PowerMac G5, PCI-Express Slots: use any available slot for KONA LHe

Note: After you install the KONA LHe card, you may notice that in the MacOSX Network preferences there is a message stating "You have a new network port named KONA LHe —be sure to check the settings...". There is no need to take any action; this occurs because MacOSX detects the RS-422 serial port on the KONA LHe card that you will use for VTR machine control.

Installing the KONA LH Card

1. Place the G5 in a well-lit convenient area, where you will have easy access to the chassis access door.
2. Using your hand, touch the outside of the G5 to discharge any static electricity you have. Remove the power cable from the back of the PowerMac.
3. Open the PowerMac to gain access to the card slots as described in your Apple User Manual. Lay the G5 on its side, motherboard facing up.
4. Remove the KONA LH card from its protective anti-static bag; place the card on top of the bag.
5. Install the KONA LH capture card into one of the 100 MHz slots in the PowerMac and put your RAID controller card (SCSI or Fibre Channel) in the PCI-X 133 MHz slot. Do not put the RAID controller *and the KONA LH* in the two 100MHz slots since this makes them share the same bus.

Note: Always put the RAID controller and KONA LH on separate PCI busses. This improves performance by reducing bus contention.

6. Remove the card edge access cover from the desired slot where you will be inserting the KONA LH card. The card edge cover is secured by a phillips screw; save this screw for use in installing KONA LH.
7. Holding the KONA LH card by the card edge plate and an outside edge, carefully insert the KONA LH card by rocking it slowly into the slot. Ensure the card edge aligns properly with the G5's opening (where the card edge cover was just removed) and that it is fully seated in the slot.
8. Secure the card in the slot using the screw removed earlier.
9. Replace the PowerMacs panel/door as removed in step 3.



Remove the KONA LH Card From The Anti-Static Bag



Locate the PCI Slots Inside Your PowerMac

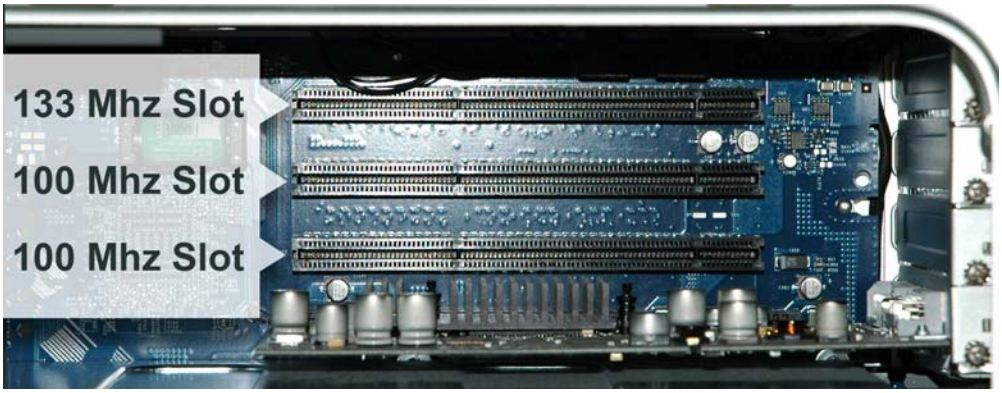

PowerMac G5 PCI Slot Detail

Note: After you install the KONA LH card, you may notice that in the MacOSX Network preferences there is a message stating "You have a new network port named KONA LH —be sure to check the settings...". There is no need to take any action; this occurs because MacOSX detects the RS-422 serial port on the KONA LH card that you will use for VTR machine control.

Cabling the System

System Video/ Audio Cable Connections

When installing your system, you'll make video and audio input/output connections. These connectors are explained individually in chapter 2. Here, system interconnection is shown and described.

System Cabling When Using The Breakout Cable

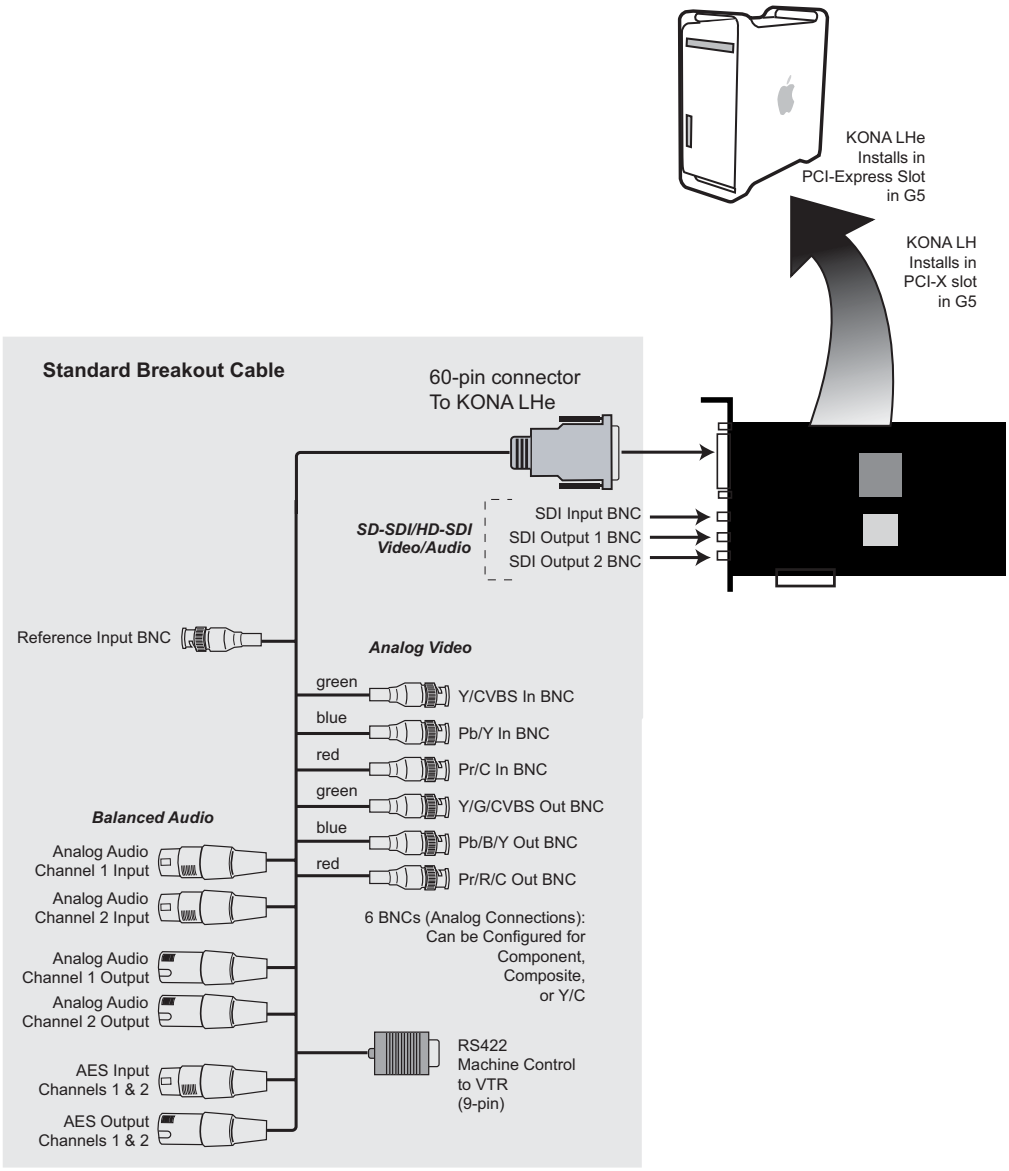

KONA LH System Using The Breakout Cable

Typical System

A figure on the following page shows typical system interconnections for a system with digital A/V sources. Your system may differ depending on VTRs, audio monitoring, and video monitoring.

1. If desired, connect your house reference sync to the KONA LH *Ref Loop* connector (BNC). The second KONA LH Ref Loop connector on the KL-box (if used) can be connected to the VTR or terminated with a 75-ohm terminator.
2. Connect a Video Monitor to the KONA LH *Component Analog Video Out* BNC connectors (preferred), or instead connect to a composite monitor.
3. Connect a 9-pin DB9 machine control cable between your VTR's RS422 control port and the breakout cable's *RS-422* machine control connector.
4. Connect two SDI cables between KONA LH (BNCs are on the card endplate) and your digital VTR (Digital Betacam etc.): one from KONA LH *SDI In* to the VTR SDI Out, and one from KONA LH *SDI Out* (1 or 2) to the VTR SDI In. The KONA LH SDI connections have embedded audio so the VTR must be configured accordingly.
5. If you have an AES/EBU-ready audio monitoring system, then connect the two channels of AES/EBU output from KONA LH's XLR connectors (channels 1 and 2) to the monitoring system AES/EBU inputs. If you instead have an analog audio monitoring system, you can use either the XLR balanced audio connectors or the two RCA-style unbalanced stereo output jacks on the Optional KL-box for output.

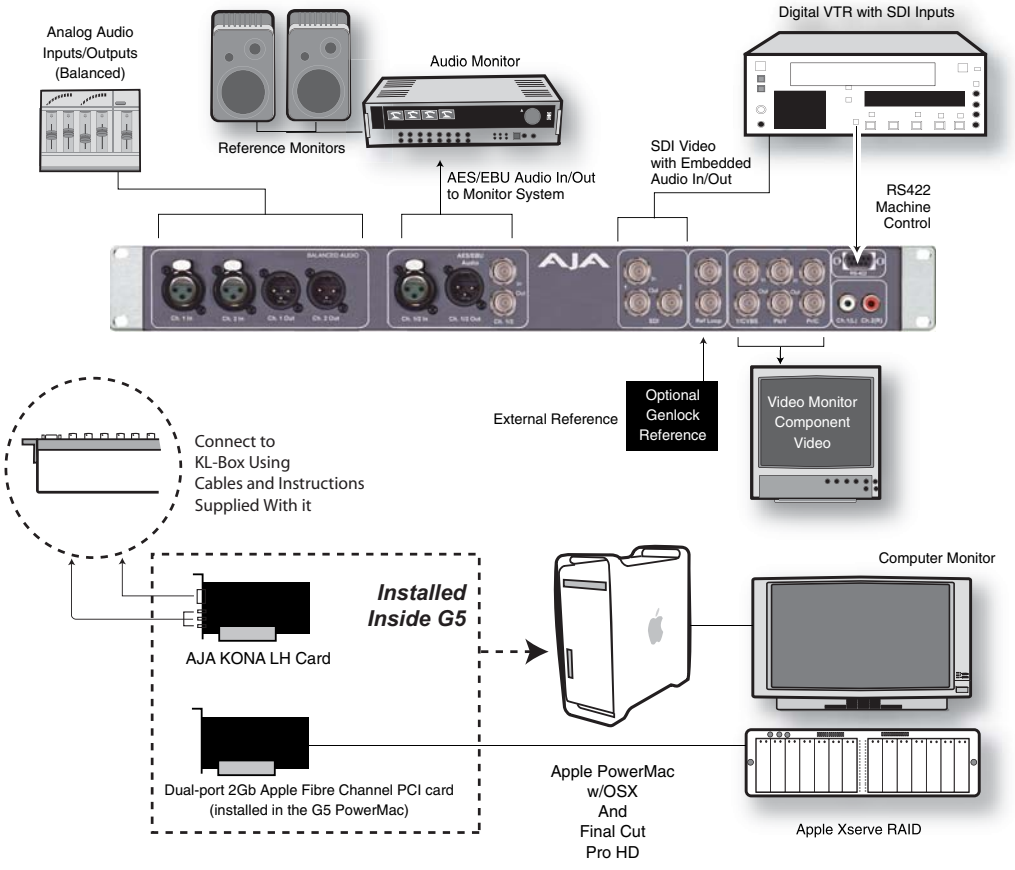

Typical System Connections—Shown with Optional KL-Box

Installing KONA LH Software

First ensure that Final Cut Pro 5 is installed as detailed in its user documentation. Final Cut Pro 5 *must be installed and have been run at least once prior to installing AJA KONA LH software.* Next, use the CD-ROM supplied with the KONA LH system to install necessary software drivers and KONA LH control panel. You cannot use KONA LH with Final Cut Pro until the AJA KONA LH software has been installed on the host Power Mac.

System software updates may occasionally become available to AJA KONA LH owners on our website (www.aja.com). We recommend checking occasionally for both software updates and additional product information.

Note: If your PowerMac has previously had another video capture or multimedia card installed, ensure you remove the card and uninstall any related software before installing KONA LH. This will prevent any hardware or software conflicts. KONA LH will operate properly on a PowerMac that also has an AJA Io installed.

Software Installation Procedure

Locate the AJA KONA LH Software CD packaged with your system. Then follow the procedure below to put the required software on the host system to be used with KONA LH. The system must be an Apple Power Mac G5. Minimum system requirements for the host were described in *Chapter 1: System Requirements.*

Note: Before installing KONA LH software, turn off any virus protection and security software that you may have installed on your computer.

1. Insert the KONA LH CD in the Power Mac
2. Locate the KONA LH CD icon on the OS X desktop.
3. Move the mouse cursor to the icon and double click to see the CD contents, which will appear in its own window.
4. In the window, locate the package file; it has an icon that looks like a box and has a ".pkg" or ".mpkg" suffix.

Note: Files ending in the ".pkg" and ".mpkg" suffix are OS X installer files. These launch the OS X installer and tell it where and what to install on your system.

5. Double-click the package to log on and begin software installation.
6. The system will respond by asking you to authenticate who you are as currently defined on your OS X user profile. Enter the proper name and password at the Authenticate prompt; if you have multiple users defined, ensure that you log on as a user with administrator-level authority.



Log On Authenticate Prompt

7. Click on the *OK* button after entering a valid user and password.
8. The installer will launch and you'll see a series of installer screens.

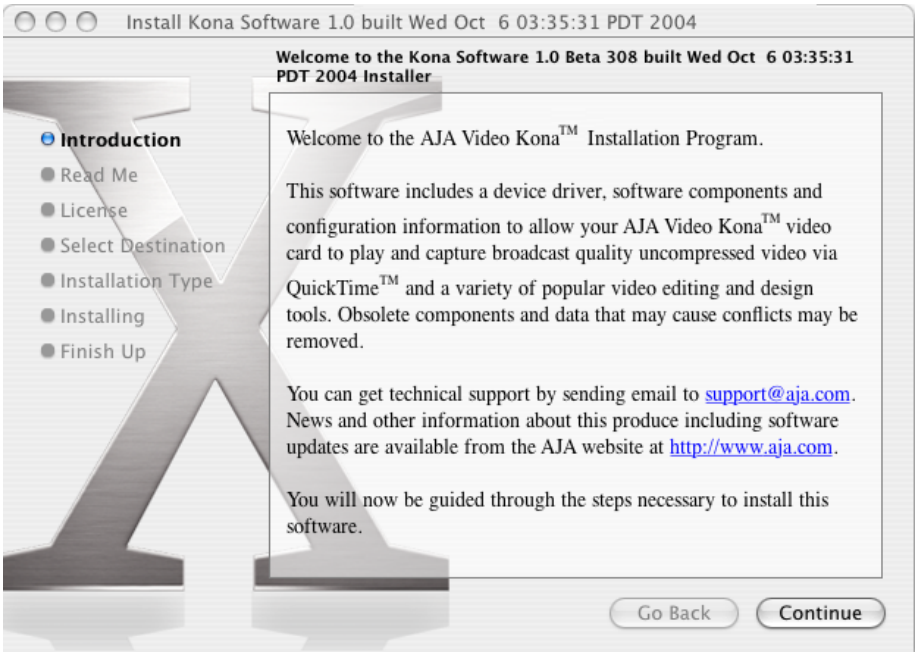

Initial Installer Screen

9. Click *Continue* to begin installation.
10. The next screen lets you know that the installer will check your PowerMac to ensure it has the hardware and software resources required (see Minimum Requirements in Chapter 1).

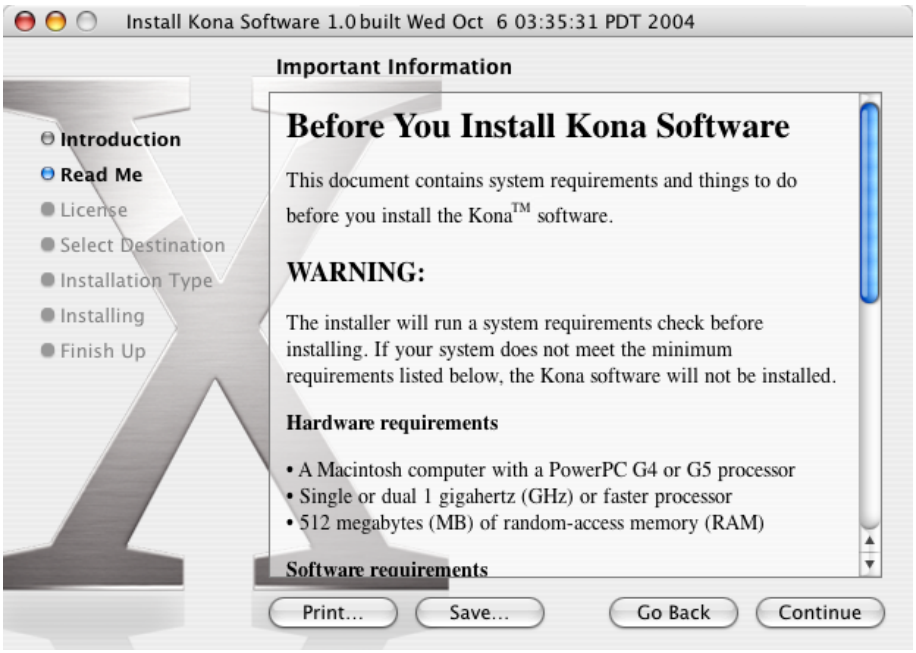

System Check Installer Screen

11. Read and agree to the Software License Agreement.

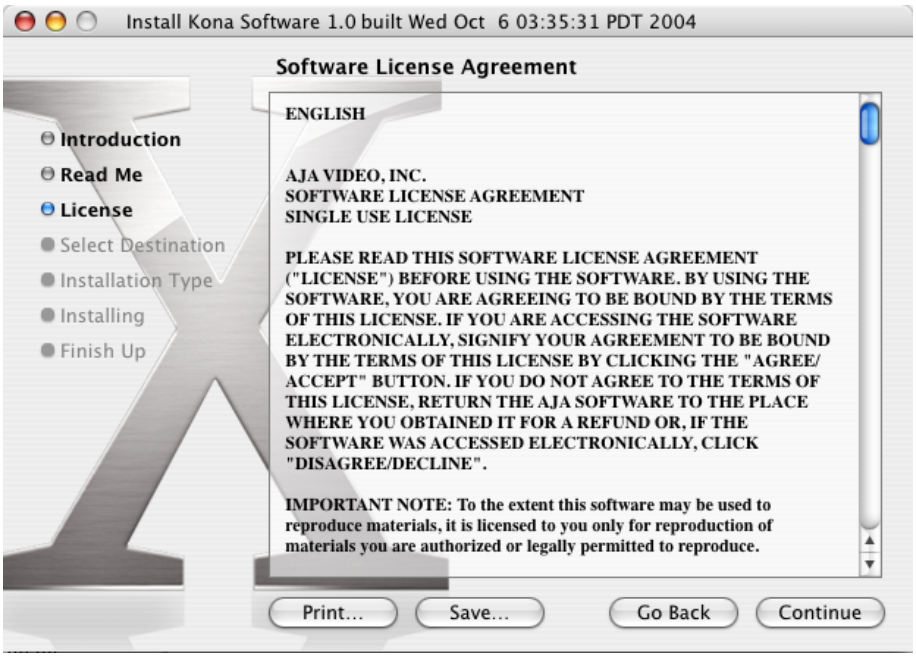

KONA LH Software License Agreement Screen

12. The next screen shows all the available drives on the Power Mac. Click on the drive that contains your system files (Apple default is “Macintosh HD”). A green arrow will point to the drive you’ve selected. Click the *Continue* button to proceed with installation.

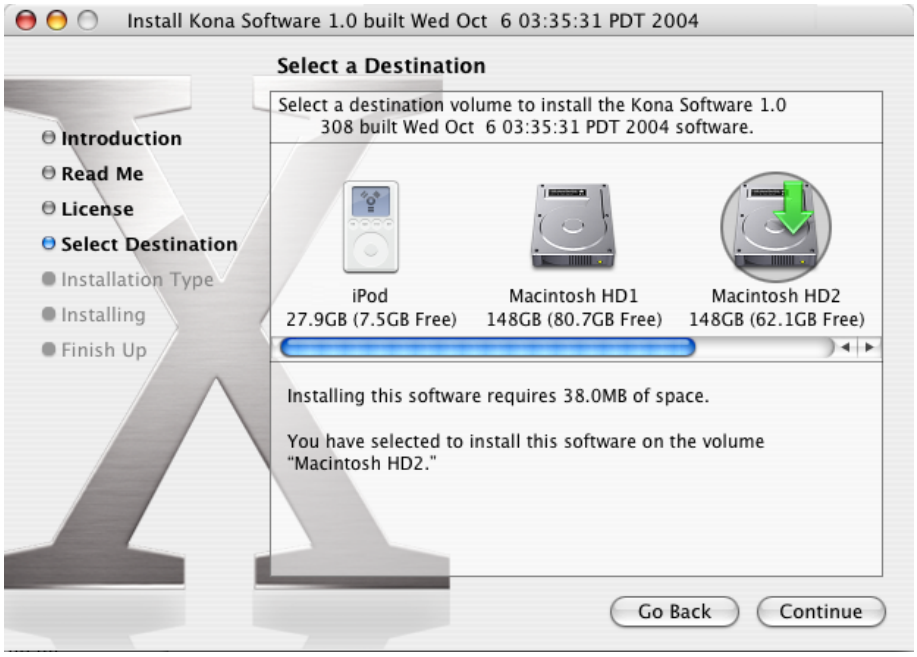

Select a Destination Drive For the KONA LH Software

13. At the next screen, click the *Install* button to place the software on the drive you previously selected.

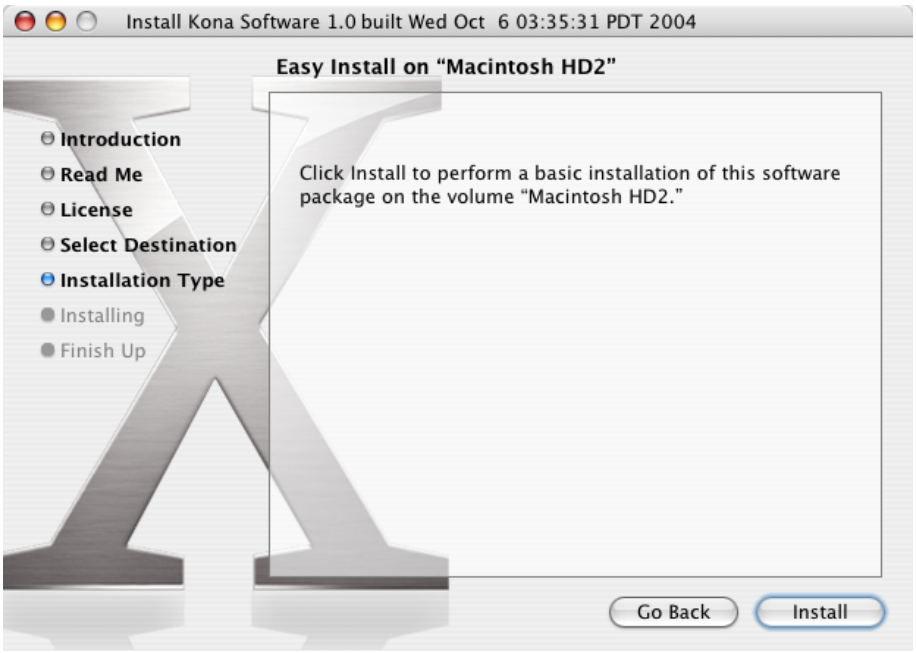

Easy Install, Installer Screen

14. A system prompt will pop up with a reminder that OS X must be restarted after installation. Click the *Continue Installation* button to proceed.

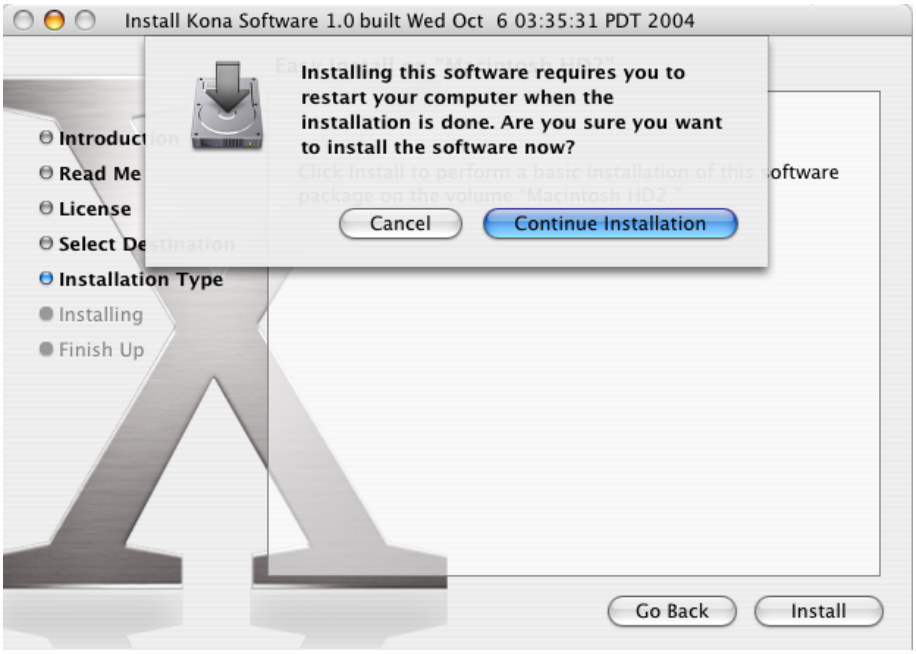

Restart OS X Reminder Prompt

15. The installer will run and put all the necessary KONA LH drivers, KONA LH Control Panel, presets and software on the desired hard drive. When it has completed installation, a final screen will be displayed announcing that "software was successfully installed."

16. Click the Restart button to complete the installation procedure. The system will perform a software restart and be ready for use.

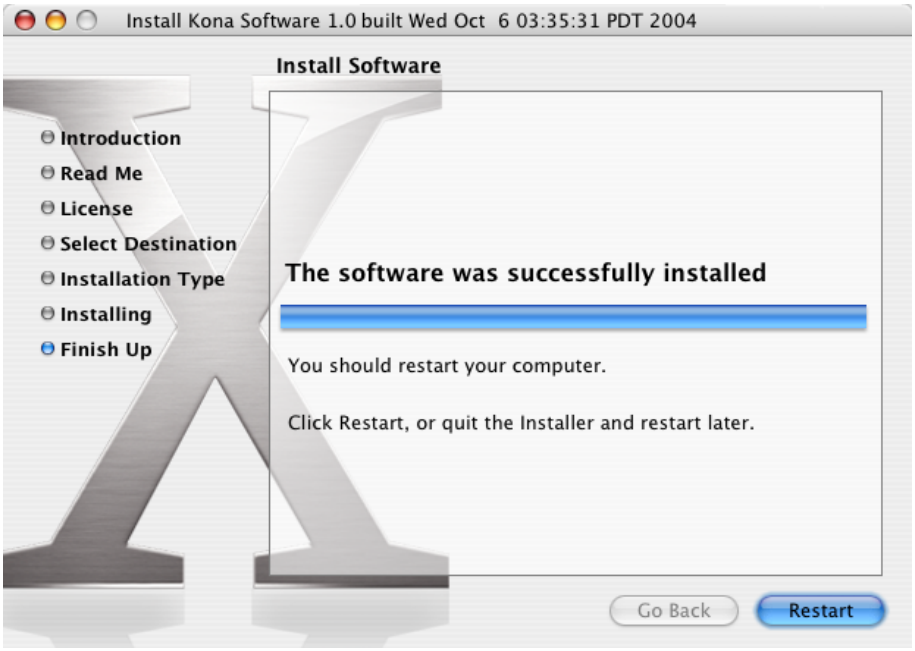

Final Installation Screen

Genlock and Your System

For video stability and proper system operation, it's always best to genlock all equipment to house sync. Although genlock is not absolutely required for KONA LH or your system, better quality and repeatable operation will be experienced by doing so. Usually, this means using a black burst generator output looped through the system. On the KONA LH cables and optional KL-box breakout box, house sync is connected to "Ref Loop".

Chapter 4:
Final Cut Pro and Other Software



Final Cut Pro

Final Cut Pro (not included with KONA LH) ships with information already configured for most common system configurations. After you install the KONA LH software on your Power Mac, all you need to do to begin using it is to become familiar with the KONA LH Control Panel and how Final Cut Pro works with KONA LH.

With Final Cut Pro you'll choose the proper setups from the canned ones provided by AJA. These canned setups are called "Easy Setups" in Final Cut Pro and are available to use and edit under Audio/Video Settings in the "Final Cut Pro" menu (next to the apple menu).

You'll also need to gain familiarity with the KONA LH Control Panel, which will be used for source selection, configuring many KONA LH features, and for creating your own preset configurations for different applications.

The manual you are reading does not provide operational information about Final Cut Pro. Please read the Final Cut Pro user documentation provided with it for information on configuration and operation. The chapter you are reading addresses configuration and setup unique to use of KONA LH with Final Cut Pro and other applications.

Using The KONA LH Control Panel

The KONA LH control panel is a software application that provides a simple visual way to see how the KONA LH card is currently configured and then make changes as desired. Settings—both what you changed and didn't—can be saved as a snapshot for recall at anytime. This lets you save settings associated with all your frequent tasks; then as you switch tasks you don't have to spend extra time constantly resetting card configurations—just load the previously saved settings for each task.

One thing you'll notice instantly about the control panel is that it represents a visual block diagram of how the card is set. The current status, input and output settings, down-converter, and many other details can be viewed as a color-coded block diagram in the control panel.

Control Panel Basics

Although the KONA LH card auto-configures depending on the inputs present, and the Control Panel intuitively shows at a glance much about what the card is doing, there is even more information presented that may not be obvious. To ensure you make the most of the software, run the KONA LH application and look at its display. Then refer to the "Basics" described here to fully understand what you're seeing and learn how to view and change the KONA LH system configuration.

> **Note:** The KONA Control Panel also works with KONA LS, KONA LH, KONA 3 and KONA 2. However, the actual features and screens displayed differ slightly since the board feature sets differ. Only one KONA card can be installed in a Mac at one time.

Before we go into too much detail, here are some basic definitions you should know (please refer to the figure that follows for reference). After studying the basics, read "*Who is Controlling KONA LH*?" later in this chapter for more advanced information on how applications interact with the KONA LH board.

Block Diagram Screen—The top area of the KONA LH Control Panel shows a visual picture representing the processing (if any) that's currently occurring, including inputs/outputs, any down conversion, reference source, and system status. Lines between inputs, the framebuffer, and outputs, show a video path. Where there are no lines, it shows there is no connection; this can be either because an input or output isn't selected or because no video is present at the selected input. The lines will also show whether the outputs are video or video + key.

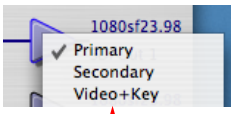

Control-Clicking an Icon Produces a Context-sensitive Menu

Icon objects on the block diagram screen (input/output icons, frame buffer, etc.—also called "widgets"—indicate their status by color (explained later) and can be clicked for context-sensitive information and choices. (These same choices can also be made from the tabbed Control panel screens.)

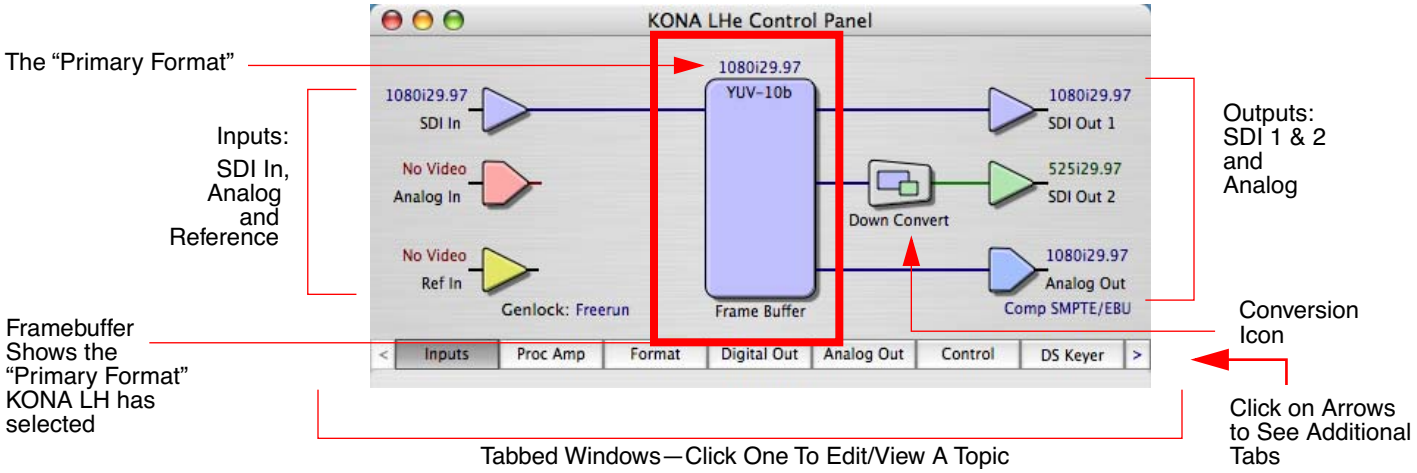

KONA LH Control Panel, Block Diagram

Framebuffer—The framebuffer is the "engine" in the KONA LH card where active video operations take place using Final Cut Pro, other 3rd-party applications, or even KONA LH itself. The framebuffer has a format (called the "Primary Format" and color space that it follows, as defined in the Tabbed Windows or via external application software (such as the "Easy Setups" in Final Cut). It is important to realize that inside the Macintosh many applications can use the KONA LH card (as you switch from window to window) and it may not always be obvious which currently controls it.

The KONA LH Control Panel displays the name of the application controlling the card. In some cases, applications may not always properly "let go" of the card as another takes over—you'll be able to tell by looking at the Control Panel.

Primary Format—The video format currently assigned to KONA LH. This is the format that the framebuffer will use and is shown in the Control Panel using the color blue. All icons in blue are the same as the Primary Format used by the framebuffer. Also any text descriptions in the block diagram that appear in blue also indicate that something is in the primary format. So, for example, if you see that the input and output icons are blue, then you know that the same format is used throughout the video path and that no format conversion is being performed. If a different color is displayed on the input or output, say green for example, then you know that KONA LH is performing a format conversion in the video path.

Secondary Format—Any format other than the currently selected Primary Format, is a secondary format. As described previously, this means that either the Inputs or Outputs are somehow different from the framebuffer's assigned format (i.e., the "Primary Format"). This can be seen at a glance because the color will be different than blue.

Input/Output Icons—The input and output icons are triangles that together with their color show all the input and outputs and their status (selected, not selected, input present or not, format, etc.). A complete video path is shown when inputs and outputs are connected with lines going to/from the framebuffer.

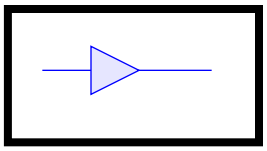

Input/Output Icon

Conversion Icon—When an input or output is a different standard than the framebuffer's then the KONA LH may down-convert the signal to standard definition (if desired). The block diagram will show the conversion by displaying a conversion icon in between the input or output and the framebuffer.

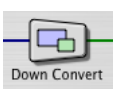

Down Conversion Icon

Color Meanings—All items in the KONA LH Control Panel block diagram are color-coded to show what is happening in realtime. This applies to both icons and text. These colors have the following corresponding meanings:

Blue: video is same format as the Primary Format (framebuffer)
Red: the selected operation cannot be performed
Yellow: reference video (black burst or other reference source)
Green: indicates that KONA LH is performing some kind of active change to the video, to make it different from the Primary Format (e.g., down convert, format change, etc.).

Tabbed Windows—The bottom area of the KONA LH Control Panel provides different information categorized by topic. Clicking on a "Tab"—or a block diagram element—will result in an information screen corresponding to a tabbed topic. The arrows at either side of the displayed tabs can be clicked to see any additional tabs not visible on the screen. If an arrow is "grayed out", then it means there are no additional tabs in that direction. Each of these tabbed windows are described on the following pages. Tabs that can be selected are:

Inputs: view and edit input selections and how they are mapped
Proc Amp: view and edit the analog proc amplifier settings (brightness, contrast, hue, and saturation)
Formats: select the framebuffer primary video format and any secondary formats and down conversion for inputs/outputs
Digital Out: assign outputs
Analog Out: configure the component/composite analog output
Control: configures KONA LH operation (pass through, desktop, etc.) plus setting output timing.
DS Keyer: configure the hardware-based downstream keyer for putting logos, or other video material on top of video being played or printed to tape.
Setup: configures Video and Audio options such as composite black level and analog audio monitor level.
Codec: used to select codec options such as whether a pause stops on a full frame or a single field (jitter shown or not) and 24 to 30 fps padding patterns.
Timecode: monitor and configure timecode
Info: displays status information about the KONA LH card and how it is installed in the host Macintosh. This information is generally intended for troubleshooting/support.

Input Screen

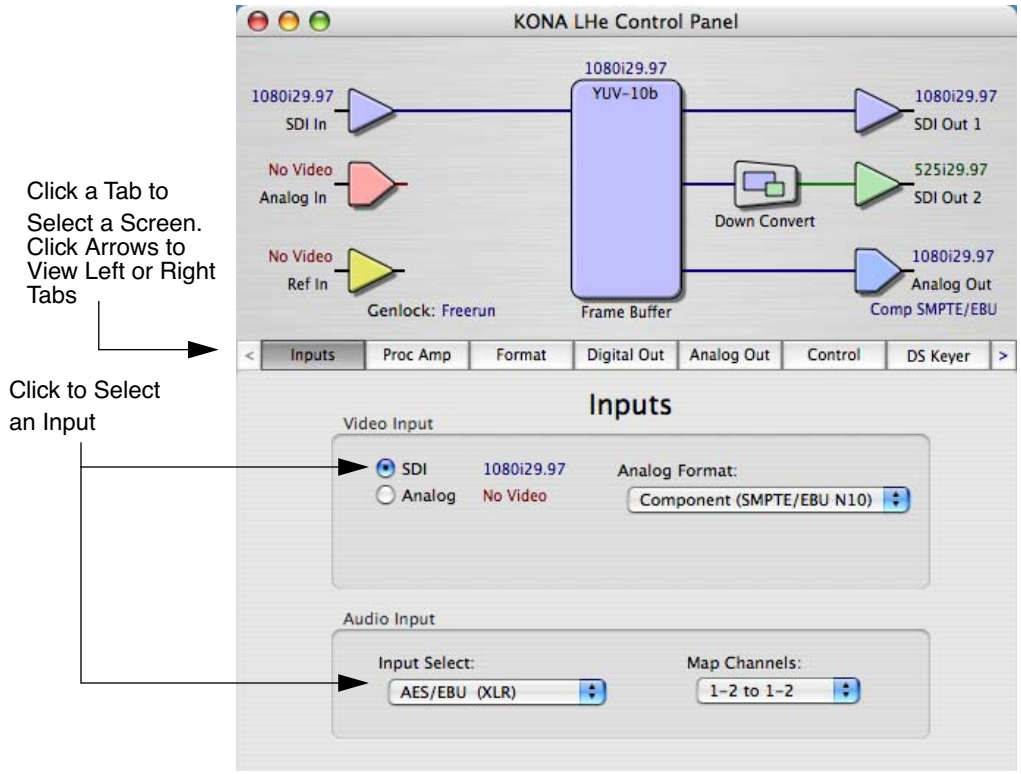

KONA LH Control Panel, Inputs Tab

On the Inputs screen you can view the currently selected video and audio input sources and map audio sources to the channels supported by Final Cut Pro (more on this later). Two information panes in the screen are provided: Video Input and Audio Input.

Input Screen Settings

Video Input—These radio buttons allow you to see and change what's currently selected and the video format that KONA LH has detected there (if any). If you wish to select a different input you can do so by clicking a different radio button. If Analog is selected, then you also need to select the Analog Format via a pulldown menu. Choices are:

Composite
Y/C
Component (SMPTE/EBU N10)
Component (Beta)

Audio Input—This pulldown menu allows you to pick where the audio comes from. KONA LH supports up to 8 channels of embedded digital audio, so you can choose out of the 16 channels that can be embedded in SDI, and pick which to bring in (from the group 1-8 or 9-16). Since Final Cut Pro currently only supports two channels of audio, here you can also select which two channels from the 8 embedded will be mapped to Final Cut's two channels.

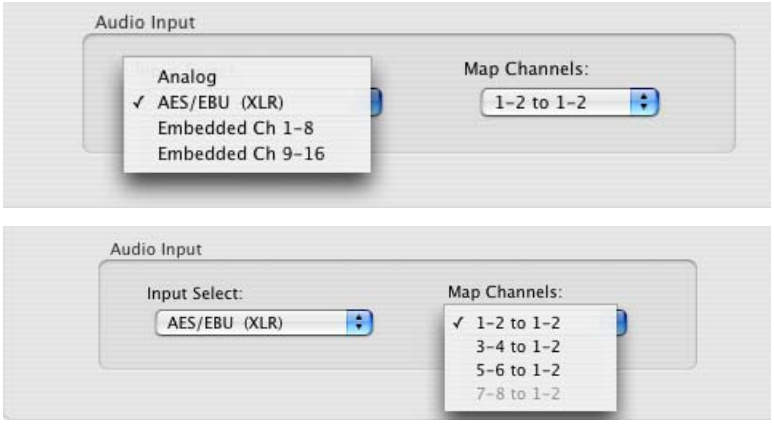

When a KONA LH has a KL-Box attached, there are two ways to connect AES/EBU inputs: XLR or BNC connectors. The Audio Input pulldown allows you to select which of the two connector groups will be used.

Proc Amp Screen

The Proc Amp screen settings affect the analog proc amplifier built into the KONA LH. Each of the four sliders controls a video parameter, with the middle being close to unity. If the value has been changed from the factory Unity setting, that value will by displayed in red at the right side of the slider. Clicking the Reset Unity button sets all four sliders back to unity.

Sliders:

Brightness
Contrast
Hue
Saturation

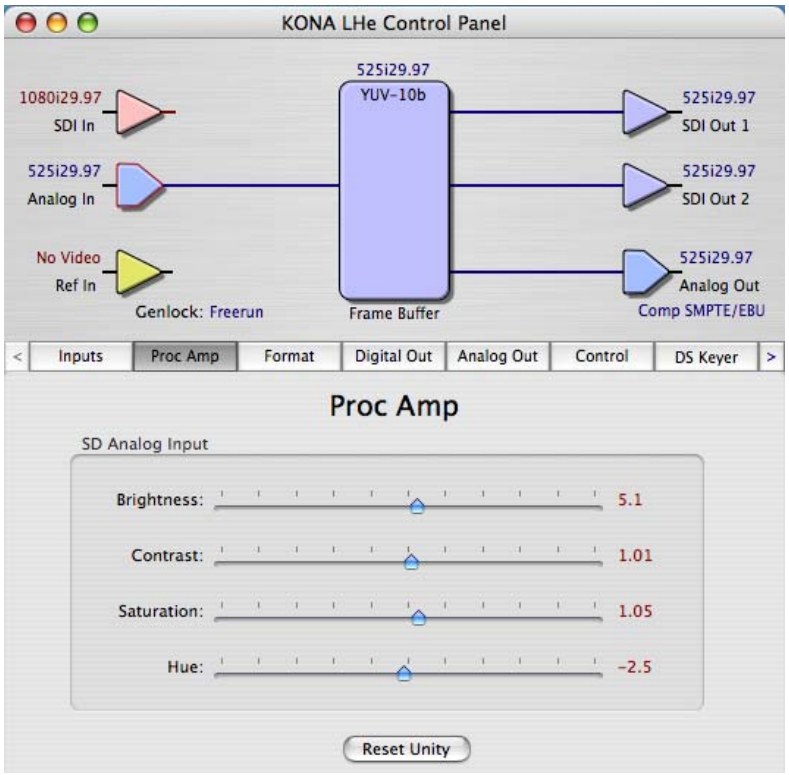

KONA LH Control Panel, Proc Amp Tab

Formats Screen

The Formats screen shows the video format currently in use by the KONA LH framebuffer (called the *Primary Format*) and allows you to change it. All throughout the Control Panel, choices are always presented based on what KONA LH can do with the signals available and the inputs/outputs selected. For example, on the Formats screen, if the output or inputs are a different format than the primary, then you'll see an additional information pane that allows you to view and edit the secondary format—including control over whether down conversion is employed.

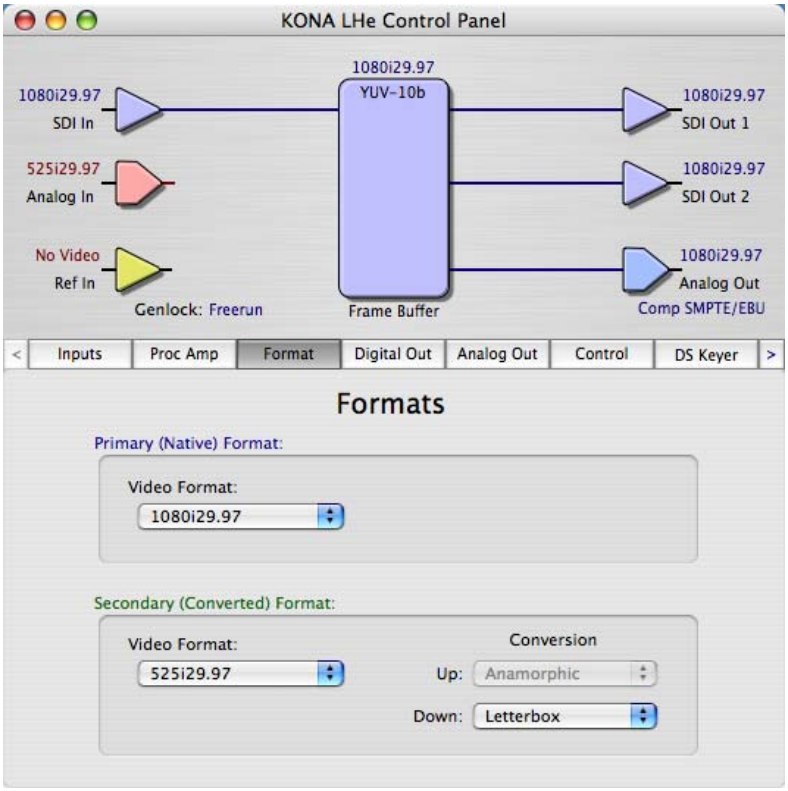

KONA LH Control Panel, Formats Tab

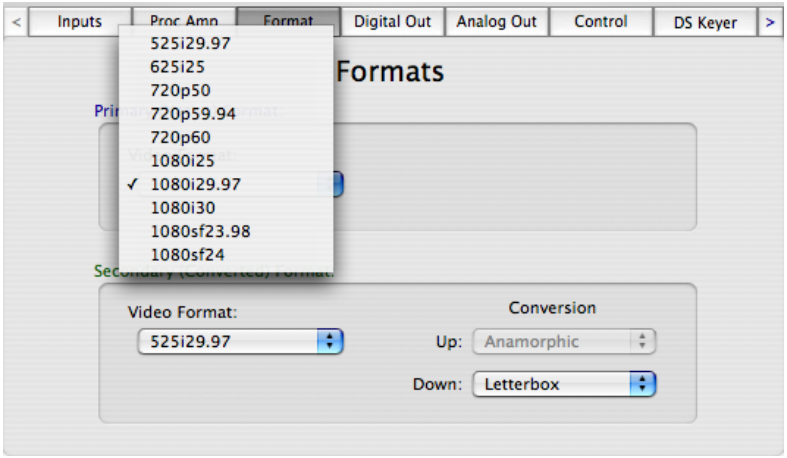

KONA LH Control Panel, Formats Tab, Showing Primary Formats Pulldown Menu

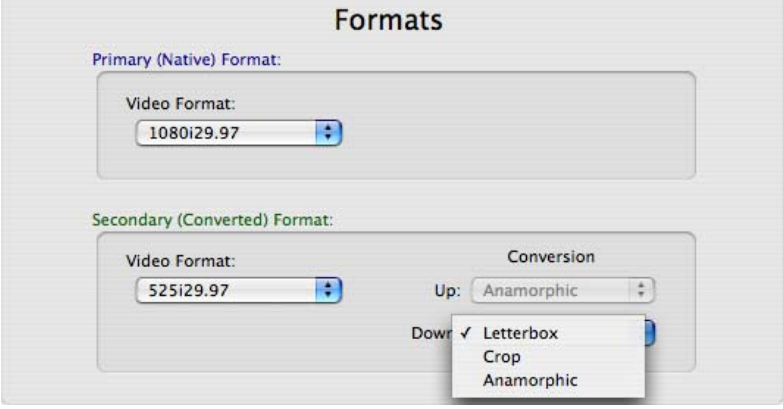

KONA LH Control Panel, Formats Tab Showing Conversion Pulldown Menu

Format Screen Settings

Video Format—This pull-down menu shows the currently selected format. This pull-down appears in both the Primary Format area of the Formats screen as well as the Secondary Format area (if present). If you select an alternate value in the Primary Format using the pull-down, it will change the format used by KONA LH's framebuffer. Video Format can only be changed when the Control Tab menu has the setting "Input Pass through". When a change is made via the Video Format pull-down, the block diagram will change to reflect the new format.

In the case of Secondary Format, the formats available can vary based on what the Primary Format is and the input signal (frame rates of input sources limits the to/from conversion choices). The "Secondary Video Format" pull-down menu lists all formats with those that are incompatible shown in gray (these can't be selected). This allows you to see what you've chosen, and also see those formats that are incompatible with the selected Primary format.

KONA LH Formats include:

525i 29.97
625i 25
720p50
720p 59.94
720p 60
1080i 25
1080i 29.97
1080i 30
1080sf 23.98
1080sf 24

Note: The AJA Control Panel software uses the abbreviation "sf" instead of "psf" when referring to "progressive segmented frame". In the manual and in other literature you may see either of these acronyms used interchangeably.

Down (Conversion)—Choices that may be available:

Anamorphic: full-screen

Letterbox: image is reduced with black top and bottom added to image area with

the aspect ratio preserved
Crop: image is cropped horizontally to fit new screen size

Digital Out Screen

The Digital Out screen shows the current settings for both the SDI outputs. If an input/output has no video, it will be indicated on the block diagram ("No Video").

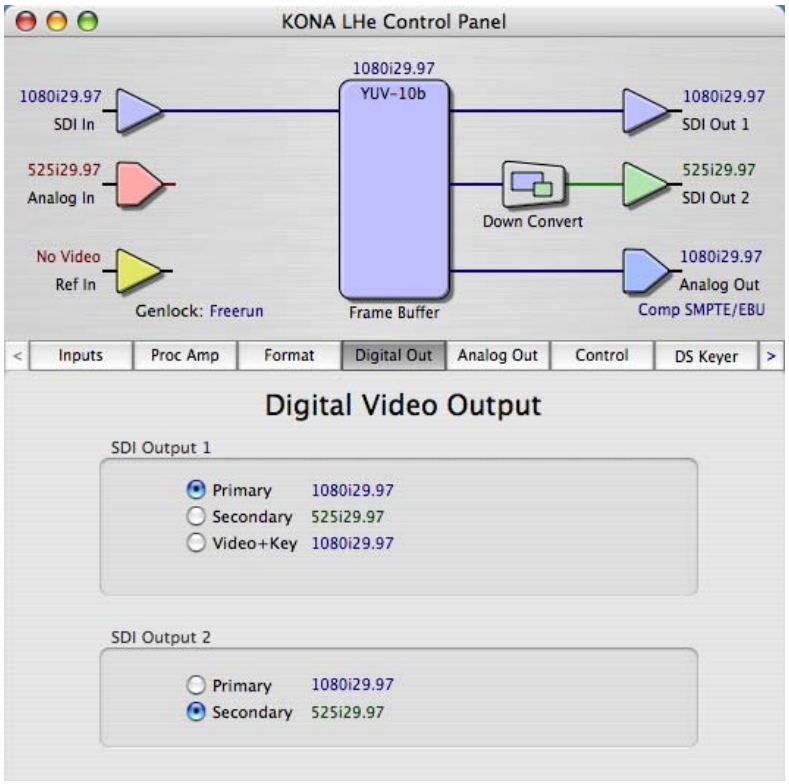

KONA LH Control Panel, Digital Out Tab

Digital Out Screen Settings

Separate information panes will be listed (as applicable) for SDI Outputs 1 and 2. Information that can appear includes the following items. You can view the current setting or click on another to change to it:

Primary—when selected, this indicates that the SDI output is set to the same format as the framebuffer. That value will be listed in blue.

Secondary—when selected, this indicates that the SDI output is set to a format different from the framebuffer (Primary Format). That secondary format value will be listed in green. This shows that active processing of the video is taking place (format change and possibly down-conversion).

Video+Key—when selected, this indicates that the SDI output 1 video is set to the same format as the framebuffer. SDI output 2 is set to a video key signal associated with output 1 (the shape of the hole to cut). Using the second KONA output as an Alpha Channel key, with the video output, may be useful for feeding production switchers, DVEs or other professional video equipment.

Control-clicking on an output icon brings up a contextual menu allowing you see the current format and make changes if desired.

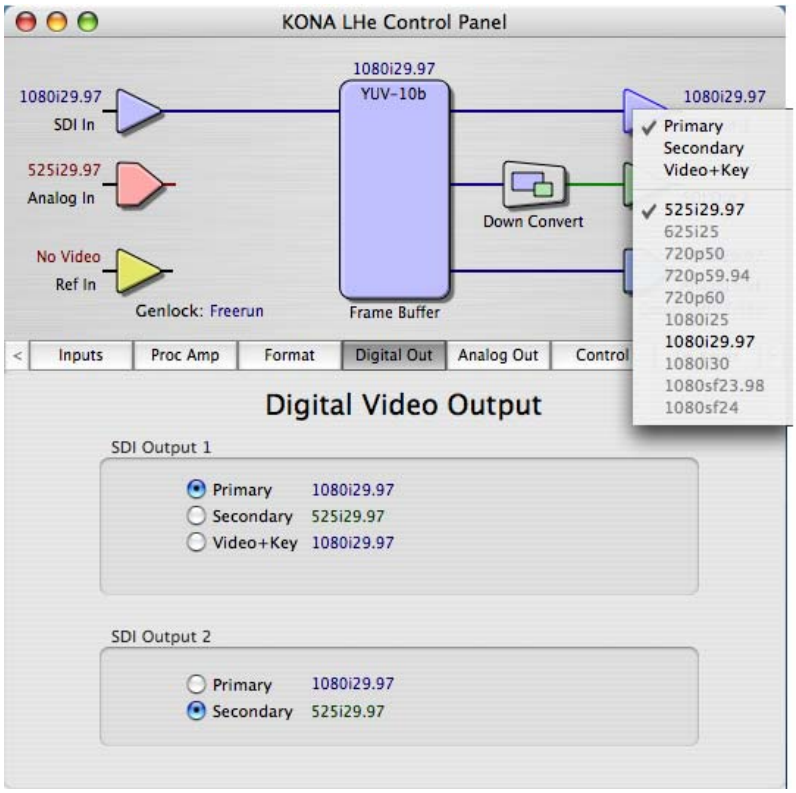

KONA LH Control Panel, Digital Out Tab

If Video+Key has been selected as an output, the block diagram will indicate the SDI outputs with video in blue and the key in red.

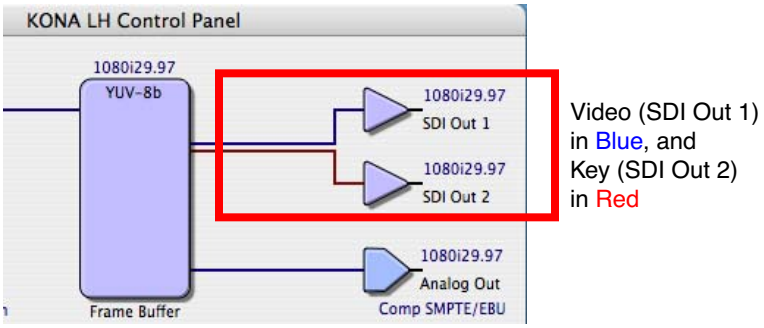

KONA LH Control Panel, Digital Out Tab, Video + Key Output

Analog Out Screen

KONA LH provides a high-quality analog component or composite output, generally used for monitoring. This screen shows the current settings for that analog output, and allows you to re-configure it when desired.

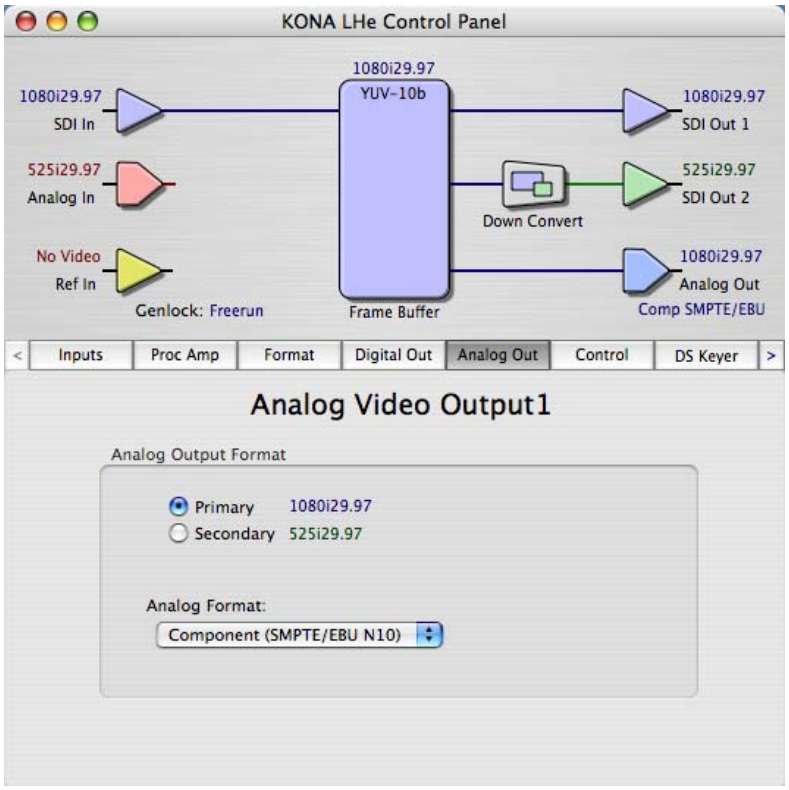

KONA LH Control Panel, Analog Out Tab

Analog Out Screen Settings

Analog Format—choices in the Analog Format pulldown menu vary depending upon the Analog Output video standard. For example, the "Composite + Y/C" selection is only available when an SD (525i29.97 or 625i25) format is in use. Analog formats can include:
Composite +Y/C
Component (SMPTE/EBU N10)
Component (Beta)
Component (RGB)
Component (RGB -HV)

Control Screen

The KONA LH can be controlled by various software applications running on a host PowerMac as well as act as a Macintosh Desktop extension. The Control Screen is where you select how the KONA LH directs video and is used by application software. This screen also provides control for configuring output timing with regard to external reference video and horizontal/vertical delay.

At the top of the Control screen it will show the current Default KONA LH output and the application currently controlling the KONA LH card (if there is one). For example, in the screen shown here, the default output is the Macintosh Desktop and the only controlling application is the KONA LH Control Panel itself.

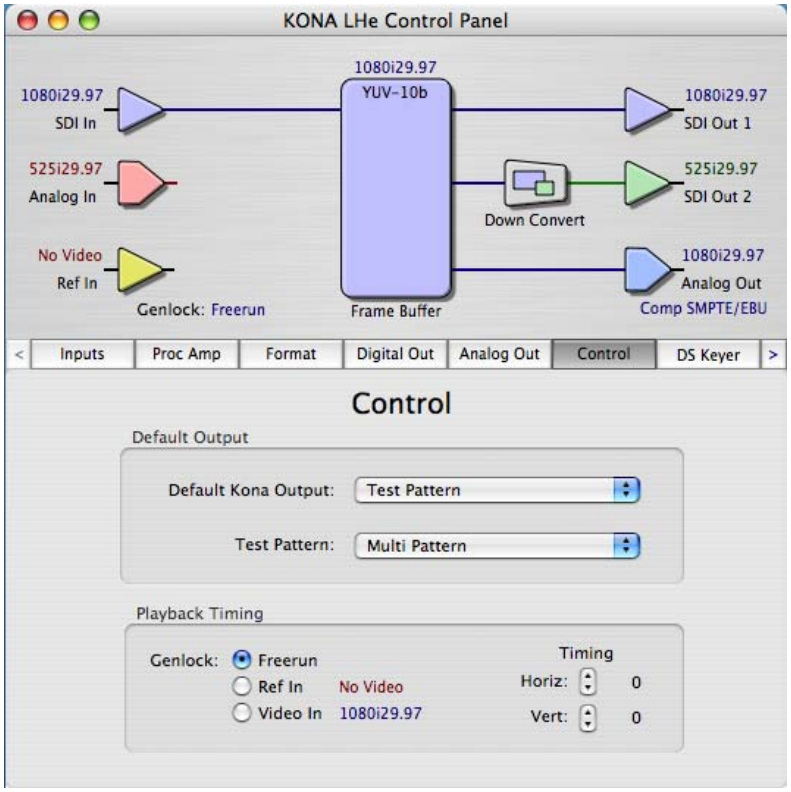

KONA LH Control Panel, Control Tab

Control Screen Settings

Default Kona Output—This is where you select what KONA LH will output as a default *when no application has control of the board*, such as when the Finder is active. Since KONA LH can be controlled by software applications as well as its own control panel, the output can change dynamically. When you select many video applications, they will grab control of the KONA LH card inputs/outputs. These settings determine what happens when an application that doesn't grab the KONA LH inputs/outputs is active.

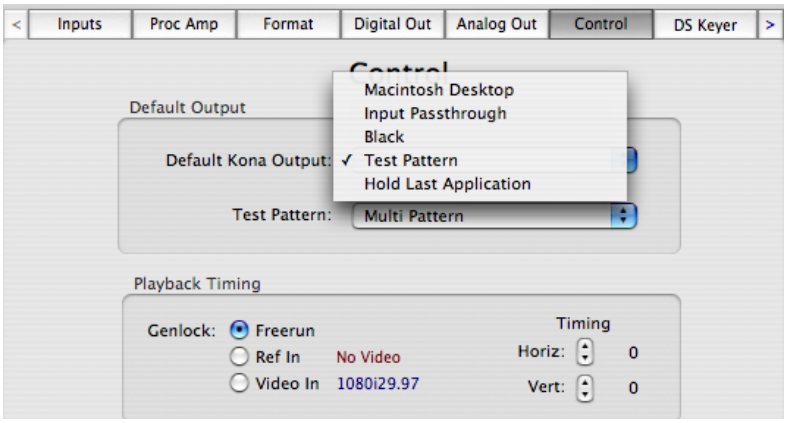

KONA LH Control Panel, Control Tab, Default Kona Output Pulldown Menu

Choices available and their meaning are:

Macintosh Desktop: when selected, this selection causes the KONA LH program video output (digital and analog) to be an extension of the Macintosh desktop. MacOS windows and applications can appear (when applicable) on the KONA outputs.

Input Passthrough: this selection directs KONA LH to route video from its selected input through the card for processing and output. When this selection is in effect, all Primary/Secondary Format selections are available for selection in controlling the output. This is similar to using the KONA LH as a VTR (as far as video/audio pass through).

Black: this selection directs KONA LH to output video black whenever an application isn't controlling the card.

Test Pattern: this selection directs KONA LH to output a choice of preset patterns—when no other QuickTime application is using the KONA board. In addition to the preset test pattern choices, a "*Load File...*" selection at the bottom of the menu allows you to load any standard Mac RGB graphics file (.tif, .psd, etc.) into the frame buffer for display.

> **Note:** the graphic file will not be scaled to fit. If it's smaller than the current frame buffer format, KONA LH will center it in the frame. If it's larger than the current frame buffer format, it will be cropped on the right and bottom.

Once a graphic file is loaded into the frame buffer it will be retained until it is overwritten by another graphic or test pattern, or when power is turned off. Graphic file names are only "remembered" in the menu as long as the Kona Control Panel application is running.

Hold Last Application: this selection directs KONA LH to hold and output the last frame of video from the last application to control KONA LH. This can be helpful when operating in an environment where you're switching back and forth between multiple application windows.

Tip: Pressing and holding the Apple *COMMAND* key while clicking in the KONA Control panel—while in any software application (Final Cut, etc.)—causes control of the KONA card to stay with that application, rather than shifting to the Control Panel. This works regardless of the setting of "Default Kona Output."

Test Pattern—This selection directs KONA LHe/LH to output a choice of preset patterns—when no other QuickTime application is using the KONA board. In addition to the preset test pattern choices, a "*Load File...*" selection at the bottom of the menu allows you to load any standard Mac RGB graphics file (.tif, .psd, etc.) into the frame buffer for display.

Note: the graphic file will not be scaled to fit. If it's smaller than the current frame buffer format, KONA 3 will center it in the frame. If it's larger than the current frame buffer format, it will be cropped on the right and bottom.

Once a graphic file is loaded into the frame buffer it will be retained until it is overwritten by another graphic or test pattern, or when power is turned off. Graphic file names are only "remembered" in the menu as long as the Kona Control Panel application is running.

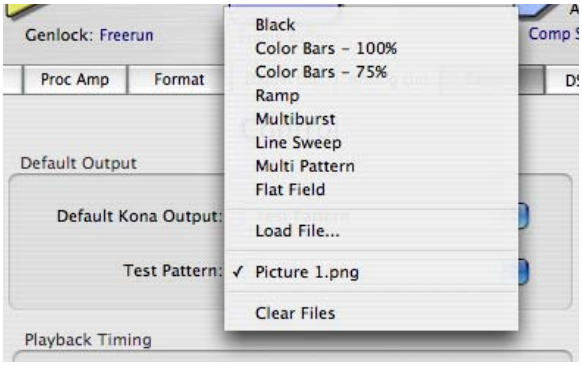

KONA LH Control Panel, Test Pattern Choices

Playback Timing *(greyed-out when in Input Passthrough)*

Genlock (*Freerun*, *Ref In*, *Input 1*, or *Input 2*)—Selects how KONA LH will synchronize program video:

Freerun: in this mode, KONA LH generates sync without an external reference source

Ref In: directs KONA LH to use the Ref Video source for sync (usually an analog black burst video signal)

Video: directs KONA LH to use whichever video input source has been selected in the *Inputs* tab window for sync

Timing (*Horiz* and *Vert*)—these two pull-downs allow output timing adjustment with reference to the Ref Video source selected. The Horizontal reference can be adjusted by selecting a number of pixels (clocks) to offset. Vertical can be adjusted by specifying a number of lines to offset.

DS Keyer

The KONA LH has a hardware-based downstream keyer that is ideal for putting logos, "bugs" or other video material on top of video being played out or printed to tape. A typical application would be putting a television station's call letters or channel over program video content. Keyed video is from the KONA's internal Frame Buffer (from storage, video In, Kona TV, etc.). Putting QuickTime video with key over the input video or a matte can only be done in Standard Definition video.

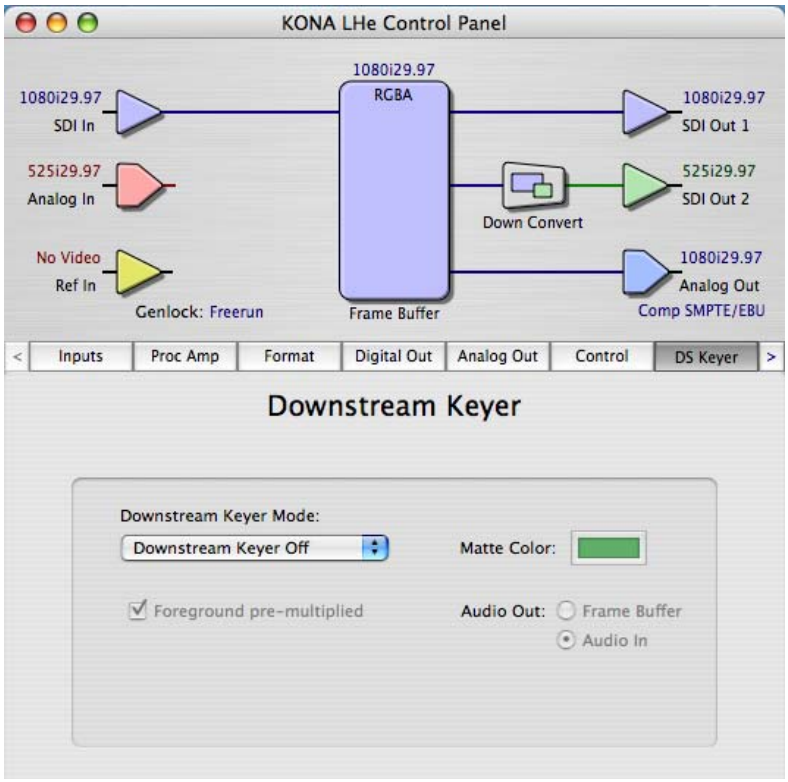

KONA LH Control Panel, Downstream Keyer Tab

Settings in the DS Keyer tab provide control over how the keyer operates and whether it's turned on or off. Controls and their meanings in the Tabbed screen are as follows:

Downstream Keyer Mode:

Downstream Keyer Off — when this pulldown menu item is selected the downstream keyer will be turned off

Frame Buffer over Matte— places the keyed video with alpha channel currently in the Frame Buffer over a fixed color matte determined by the "Matte Color" setting set separately.

Frame Buffer over Video In—places the keyed video currently in the Frame Buffer over the video input for playout or print-to-tape.

Matte Color: only available when the pulldown "Frame Buffer over Matte" is selected—pressing this button brings up a color selection dialog. The dialog provides a variety of ways to select a matte color including a color wheel, color picker (choose from a location anywhere on the computer screen), numeric sliders, swatches, "crayons", and spectrums. The matte chosen will be used as a video background under the keyed video.

Foreground pre-multiplied (checkbox): use to avoid "matte lines" and improve the appearance of the foreground (key) being composited over the background.

Audio Out:

Frame Buffer—select audio out to be routed from the contents of the Frame Buffer.

Audio In—select audio out to be routed from KONA's currently selected input(s).

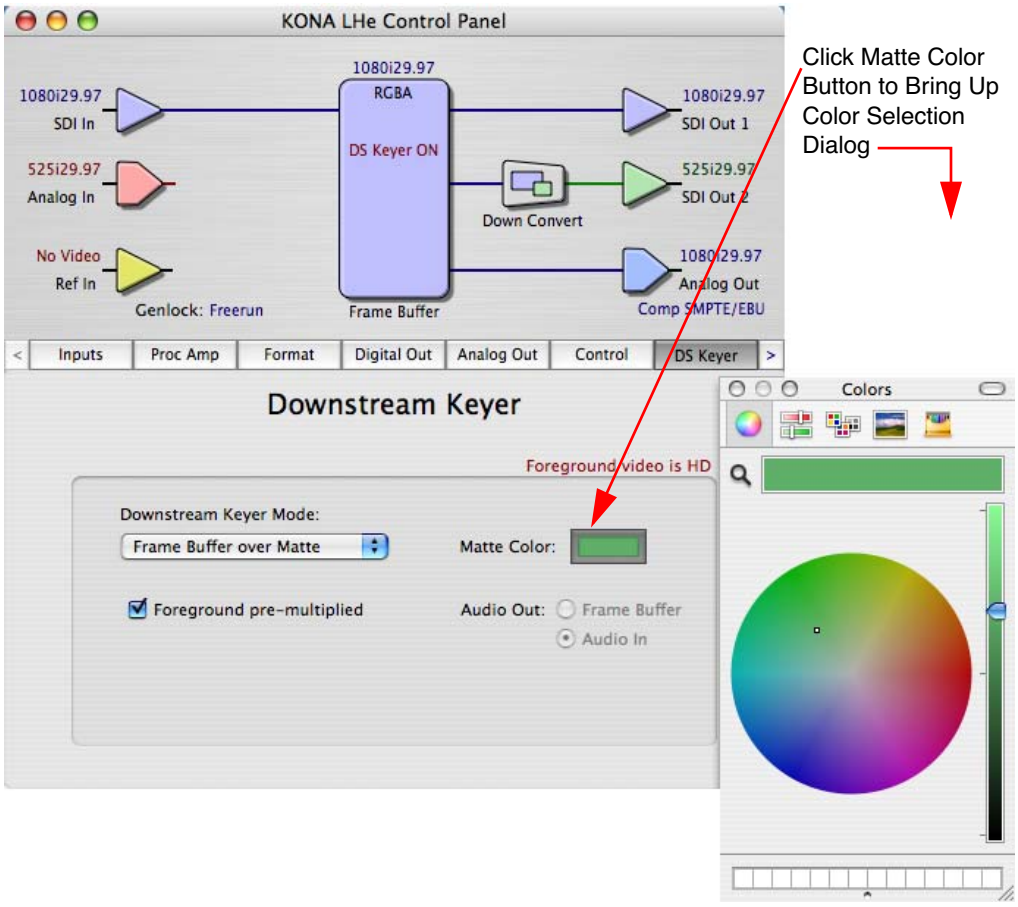

KONA LH Control Panel, DS Keyer Tab, Placing the Frame Buffer Video Over a User-specified Matte

Setup Screen

KONA LH provides a high-quality analog component or composite output, generally used for monitoring. This screen shows the current settings for that analog output, and allows you to re-configure it when desired.

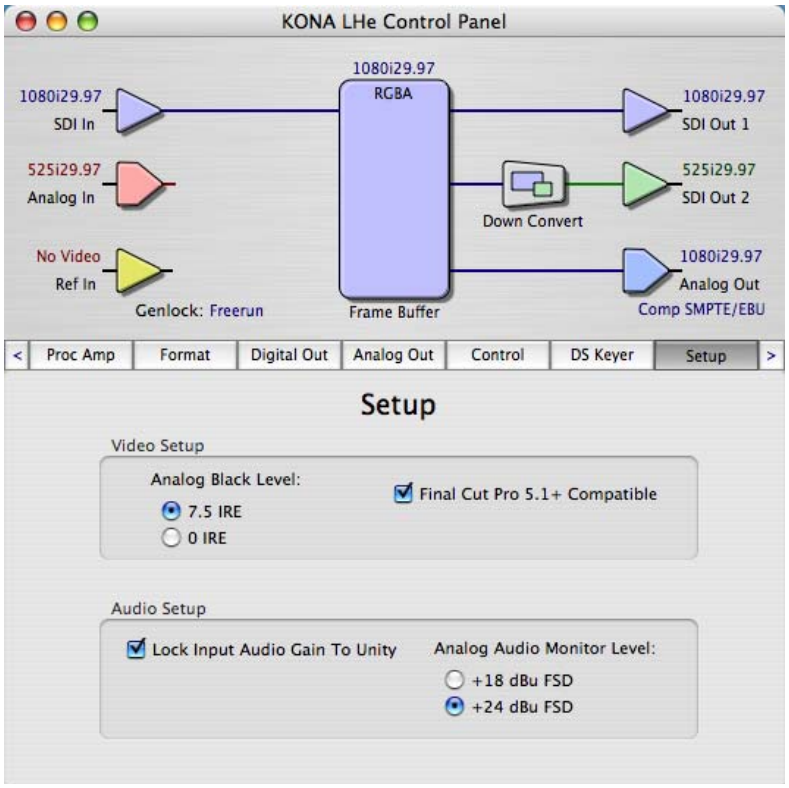

KONA LH Control Panel, Setup Tab

Setup Screen Settings

Analog Black Level—choices in the black Level pulldown menu are only available for the two Composite analog formats. Choices presented are for US or Japan settings:
7.5 IRE (NTSC US)
0 IRE (NTSC Japan)

Final Cut Pro 5.1+ Compatible—set this checkbox if you are running Final Cut Pro 5.1 or newer software. Not checking the box when running 5.1 (or newer) results in reduced capture accuracy.

Analog Audio Monitor Level Audio—when a KL-Box is connected to KONA LH, the button selected determines the audio level that will appear at the Analog Audio Output RCA connector pair ("FSD" is *full-scale-deflection* reading as measured on a VU meter). Select +18 for Europe or +24 for USA.

Lock Input Audio Gain To Unity—When set, the KONA card will ignore the Final Cut Pro gain setting and set the audio gain at unity. When not set, this checkbox tells the KONA card to get the audio gain setting from Final Cut Pro.

Codec Screen

This screen offers a variety of controls that determine how the card behaves under Final Cut Pro.

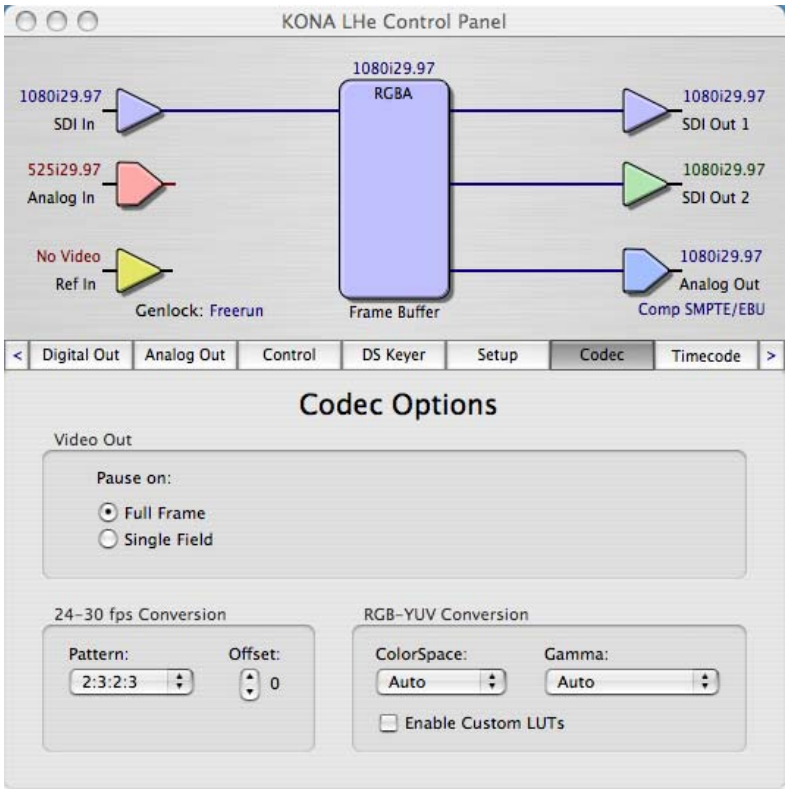

KONA LH Control Panel, Codec Tab

Codec Screen Settings

Pause On—these two choices determine what happens when Final Cut Pro is paused in stop mode:
Full Frame: both fields are displayed resulting in some jitter while paused.
Single Field: a single field is displayed, showing no flicker (useful when color correcting or whenever the flickering would be a distraction).

24-30 FPS Conversion—the value selected in this pulldown is used whenever, due to format selection, you've chosen to do 24 frames-per-second to 30 conversion where extra fields will be added to pad the existing ones. Depending on video content, selection of different field patterns may be useful in reducing jitter due to the content of adjacent fields. The numbers in the pattern choices specify the frequency with which inserted fields will be repeated. For example, "2:3:2:3" means duplicate a field twice, then the next field three times, then the next twice, and then back to three times.

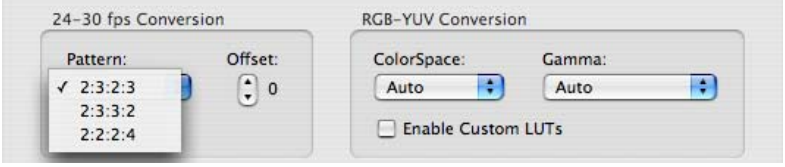

KONA LH Control Panel, Codec Tab, Frame-padding Pattern Choices

YUV-RGB Conversion: These pulldowns select industry standard color space and gamma transfer functions for the YUV-RGB conversion, or allow you to direct the KONA card to automatically determine it for you.

Colorspace—choose from:
Rec 601
Rec 709
Auto

Gamma—choose from the following:
Linear (1.8)
Rec 601 (2.20)
Rec 709 (2.22)
Auto

Enable Custom LUTs—this checkbox enables a custom color lookup table (LUT) for use in Final Cut Pro. When checked, there will be a new "Custom LUT" menu item under the *Windows* menu in Final Cut. Selecting that item brings up the KONA LH Control Panel "Custom LUTs" dialog shown below. Defining a LUT applies it to the KONA LH output. The custom LUT will be saved with the Final Cut Pro presets.

Note: Custom LUTs only work with RGB material.

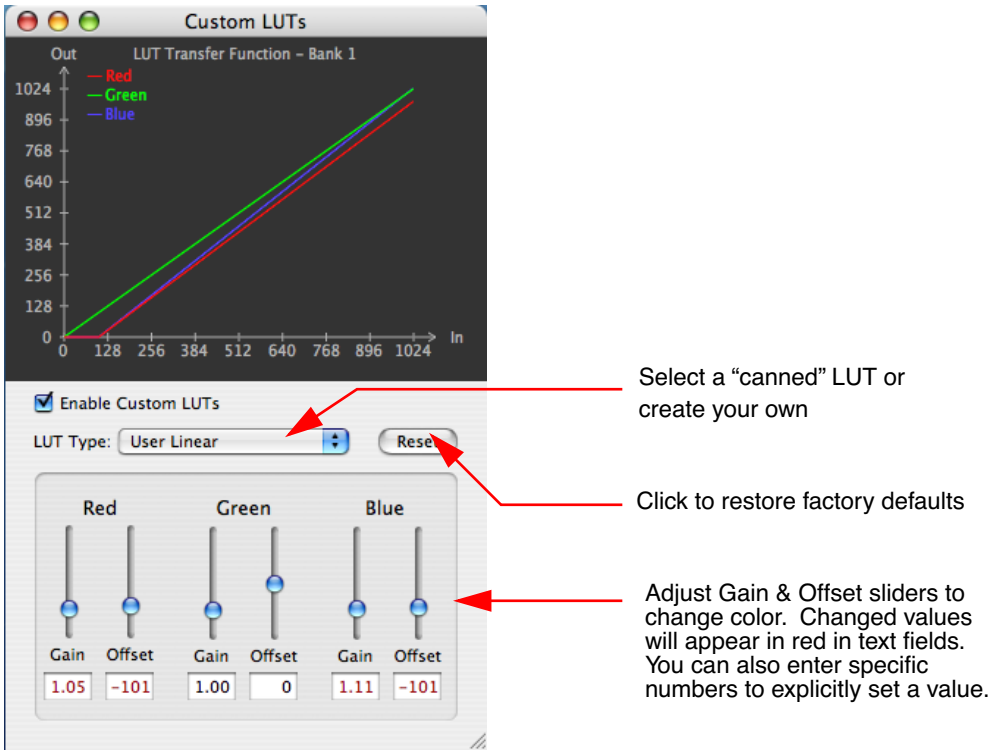

KONA Custom LUTs Dialog

Timecode Screen

The timecode is used for both monitoring the RP-188 timecode embedded in the digital data stream and for selecting a timecode offset (if required) for the attached VTR (connected to KONA LH's RS-422 port)—and sent during assemble-edit mode.

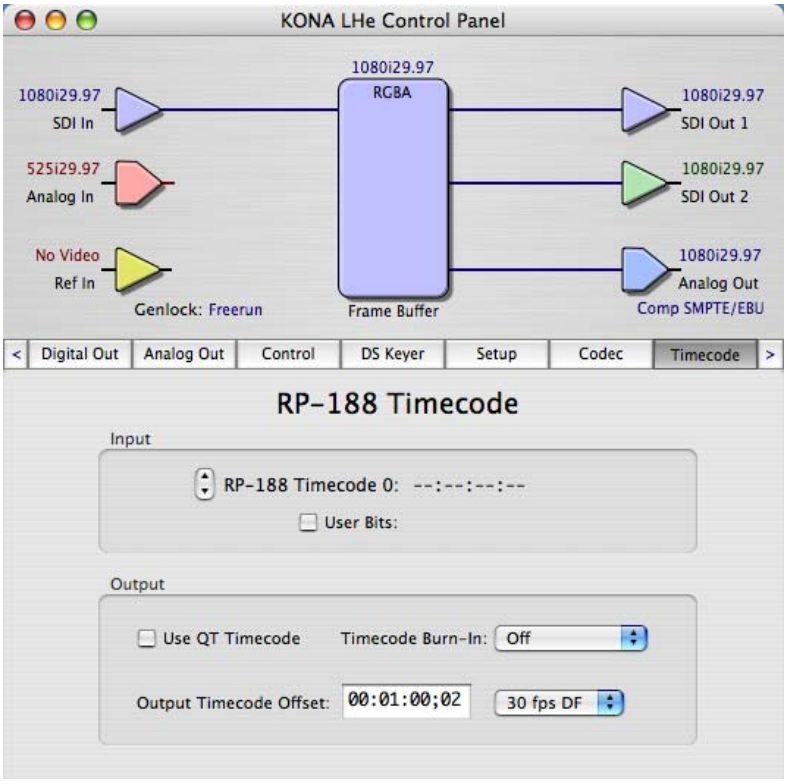

KONA LH Control Panel, Timecode Tab

Timecode Screen Settings

RP-188 Timecode <n>—in RP-188 timecode there can be multiple timecode values in the data stream. Use this pull-down to select the one you wish to monitor. The selection will be displayed in the timecode value displayed to the right of the pull-down.

User Bits—For monitoring Varicam timecode, you may wish to monitor the user bits embedded in the timecode. If you set this checkbox, KONA LH will detect and interpret the Varicam user bits and display them next to the checkbox.

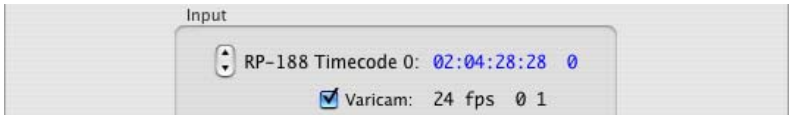

KONA LH Control Panel, Timecode Tab, User Bits Checked

Use QuickTime Timecode—when checked, this directs KONA to output timecode from the QuickTime timecode track. When not checked, KONA uses the *Output Timecode Offset* value plus the number of frames into the movie. Note: not all QuickTime applications use or support timecode tracks—so sometimes the QuickTime timecode is missing or not meaningful.

Output Timecode Offset (entry field and FPS pull-down)—this text entry field allows you to specify a timecode offset for use with Final Cut Pro (or any other application that has timecode offsets that are user-controlled). In FCP, go to "Timeline Options" and locate the "Starting Timecode" value. Use that same value here as the "Output Timecode Offset" to ensure the timecode is synchronized.



Timecode Burn-in—this pulldown selects whether the timecode value is "burned-in" on video output from KONA LH. If set to "OFF", timecode will not be keyed over the video. If set to "timecode", then the timecode value will be keyed over the output video. This can be useful for synchronizing, choosing edit points, dailies, and many other purposes.

Note: SMPTE RP 188 defines a standard for the transmission of time code and control code in the ancillary data space of a digital television data stream. Time code information is transmitted in the ancillary data space as defined in ANSI/SMPTE 291M. Multiple codes can be transmitted within a single digital video data stream. Other time information, such as real time clock, DTTR tape timer information, and other user-defined information, may also be carried in the ancillary time code packet instead of time code. The actual information transmitted through the interface is identified by the coding of a distributed binary bit. Equipment manufacturers can use the meta data for different purposes.

Info Screen

This Tabbed screen shows the KONA LH software files that have been installed on your system. This information may be needed if you talk to an AJA Customer Service representative to determine if files are missing or need updating.

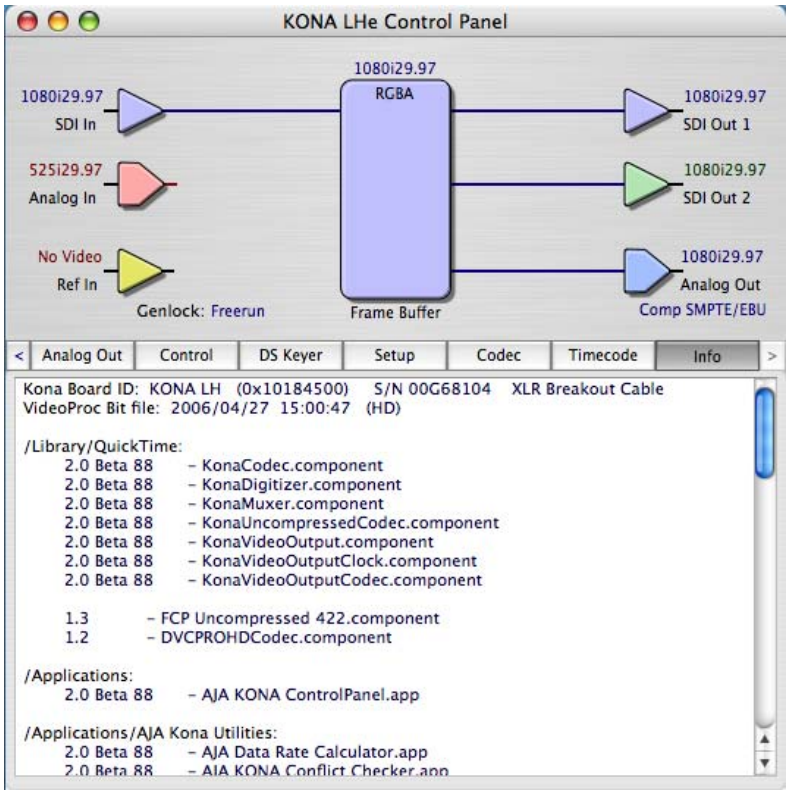

KONA LH Control Panel, Info Tab

Saving Your Control Panel Presets

After configuring the KONA LH Control Panel via the Tabbed screens, you can then save all your settings as a snapshot for later recall—called a preset. In this way, you can organize the presets for all your typical tasks, saving time by not having to manually reconfigure each time. To save a preset, simply go to "File -> Save Preset...". Be sure to give the preset a meaningful name. Thereafter the preset will be available under the Control Panel "Presets" menu.

Who is Controlling KONA LH?

If you are consistent in the workflows and formats you use between applications, you generally won't be surprised by how your system operates. KONA LH is very flexible and most applications perform the necessary housekeeping so they work correctly when they're active and when they're not. However, since several applications using KONA LH can be running at once, with one active, it can create confusion when settings are different in each and you switch back and forth. To prevent confusion, we recommend you run the KONA LH Control Application and have it visible somewhere on your Macintosh desktop. It will tell you, even when it's not the "active" application, who has control of KONA LH and what the format selections are.

For further understanding, read on and we'll give you some further background on KONA LH control. The main issue you'll generally want to know, is what application *has control of KONA LH's Primary Format at the current moment.*

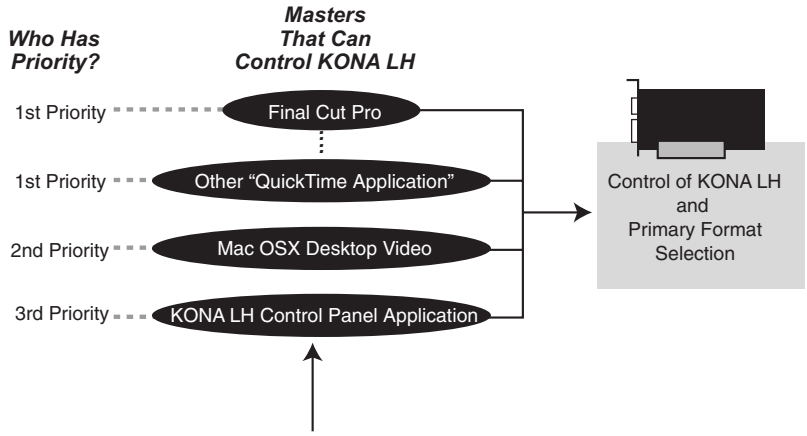

When you click in an application window, the "Master" controlling KONA LH changes, possibly changing the Format Selections in effect. This happens because each application has it's own sets of control parameters

TIP: If you keep the KONA LH Control Panel window in view, it displays the application that is in control and what the Primary and Secondary Format Selections are at all times.

KONA LH Control Priorities

The KONA Control Panel is one of three masters contending for control—and it's the lowest priority of the three. The other two masters are: any currently running QuickTime application (e.g. Final Cut Pro, Apple Motion, After Effects, etc.) using the board and the Mac "Desktop" display. The priority of these three "masters" is:

1. QuickTime Application
2. Macintosh Desktop
3. KONA LH Control Panel

By "*Master*", we mean a process that can control and change what the KONA LH is doing and the Primary and Secondary formats that it uses (as set in the Control Panel "Formats" tab screen).

QuickTime Application—1st Priority

If a running QuickTime application uses KONA LH for capture or output, it controls the Primary format via its own menus and settings. For example, when Final Cut Pro is active (it's the topmost application) and has KONA LH as its "A/V Device", then the KONA LH'S Primary format is determined by Final Cut's "Video Playback" submenu (under the "View" menu) or its "Audio/Video Settings..." dialog under A/V Devices.

When a QuickTime application is in control of the KONA LH board—versus one of the other masters—it will be indicated by a label in both the KONA Control Panel's *Formats* and *Control* tabs. The KONA LH Control Panel's *Primary Format* menu will also indicate that it is not active while the QuickTime application is running—it will be grayed-out.

What can be confusing is that QuickTime applications can start and stop and change modes—even while they are running! And the behavior of different QuickTime applications can vary: some applications take control of the board as soon as they are launched and don't give it up until they quit, while other applications take control of the board only when they are the "front-most" running application and then relinquish control when they're not. Final Cut Pro is one of the latter type QuickTime applications. This difference in behavior can surprise you when you click in and out of multiple QuickTime application windows.

To illustrate such possible confusion, consider this multiple application scenario:

1. Open Final Cut Pro, select KONA LH as the A/V device. FCP takes control of the board and tells it what Primary format to use. If one of the FCP windows covers up the KONA Control Panel application (which typically happens), you won't be able to see the *"Kona card is in use by Final Cut Pro"* message displayed in the Control Panel, or be able to tell which format FCP has selected. (This is why we recommend you arrange your display so you can see the Control Panel at all times.)
2. Next, you want to see what the KONA card is doing, so you find the KONA Control Panel application by clicking around on the desktop, eventually clicking on the Control Panel to make it visible. As soon as FCP realizes it is now running in the background, it gives up control of the KONA LH board. The KONA Control Panel application takes away the "*...Final Cut Pro"* message.
3. With the Control Panel the topmost application—and in control of the board—you now switch to a different Primary format.
4. However, when you click back on Final Cut Pro and bring it back to continue your project, it becomes the master again and resets the board's Primary format to the one determined by Final Cut's A/V Settings dialog. To further the surprise, if FCP's windows are covering the KONA Control Panel window, the change will be hidden and you won't know why the board isn't doing what you told it earlier via the Control Panel.

The moral of the story: keep the Control Panel visible so you can learn what various QuickTime applications are doing when they control KONA LH—and then you can step in and change the application's settings and Control Panel settings as desired to get the configuration you expect.

Mac Desktop Video—2nd Priority

If you choose "Macintosh Desktop" as your KONA Default Video Output (Control Tab), then the Mac Finder uses the KONA LH board as a second (or third, or fourth...) graphics "desktop" output—*as long as there isn't a QuickTime application running.* When the Finder is in control, the Primary Format is dictated by the System Preferences "Displays" panel or by you selecting "Show Displays in the menu bar", from the Displays menu near the right side of the main menu bar).

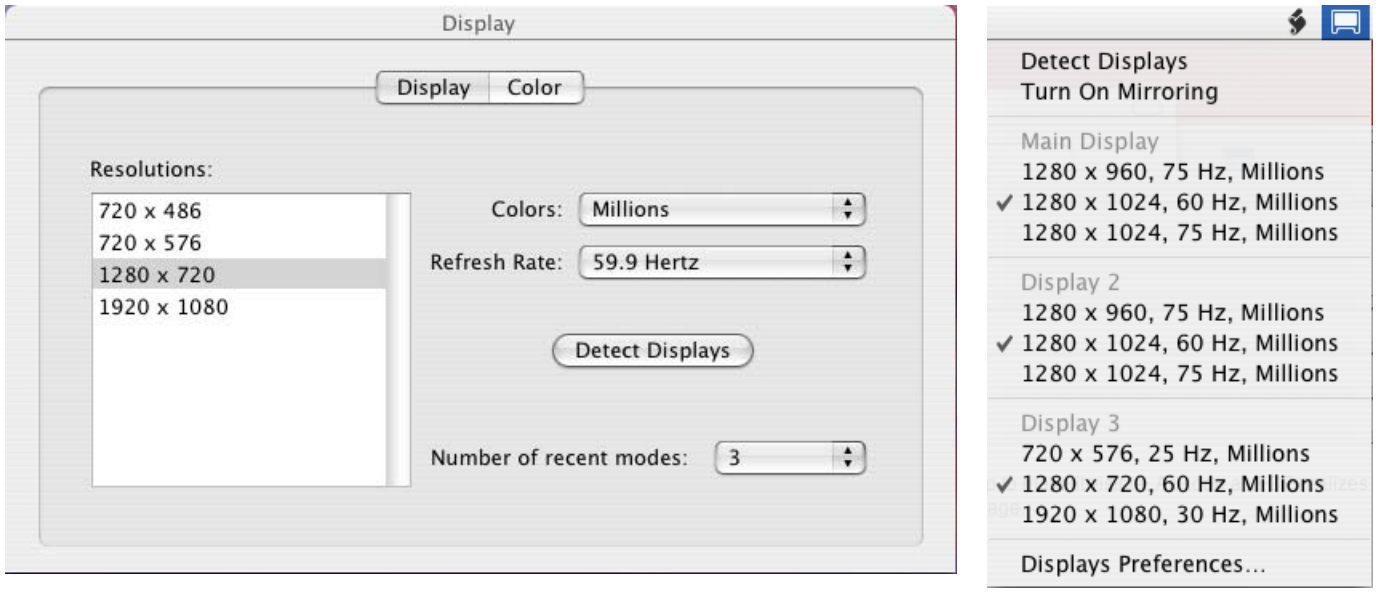

When the Finder is in control of the KONA board, the KONA Control Panel disables the Primary Format popup and puts a message in the KONA Control Panel "Formats" tab as follows:

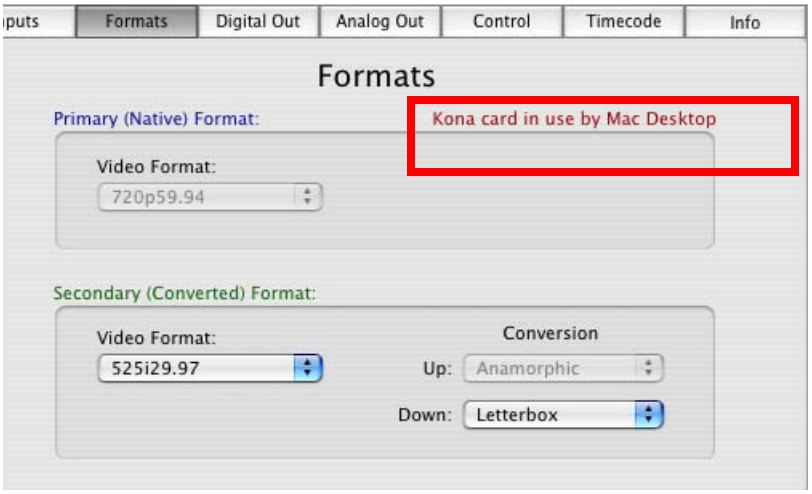

KONA Control Panel—3rd Priority

If a QuickTime application *is not running* and the *Default Video Output* is not set to *Mac Desktop,* then the KONA LH Control Panel gets control of the board.

Control Recommendations

To avoid surprises, run the KONA LH Control Panel, keep it visible on the desktop—and stay consistent in your settings within all QuickTime applications when working on a project. For example, if you're working in a particular format (e.g. 525i29.97), it would make sense to set Final Cut Pro for 525i29.97, the Mac Desktop size to 720x486, and the KONA Control Panel for 525i29.97. Then, when you switch between applications, the output will stay in the same format.

Having the Control Panel running and visible helps because you can always check and see what the board is doing and who has control of it—even when the Control Panel is running in the background.

Easy Setups for Typical Uses

Final Cut and KONA LH together make working with multiple formats an easy proposition. Inside of Final Cut, equipment and setting presets are available in groups called Easy Setups, from which you can choose typical system configurations. A large set of Easy Setups are supplied with KONA LH and installed along with the KONA LH software. These canned choices can be used directly or as the basis for making your own customized Easy Setups unique to your system. By duplicating an Easy Setup and then making changes to it, you simplify the process of configuring and re-configuring when working with new formats.

Although this manual assumes you're familiar with Final Cut Pro and have read its documentation, let's review Easy Setups and how to use them effectively with KONA LH.

At the simplest level, Final Cut lets you choose and edit presets for capturing media, device control, and for project sequences. These presets are defined in the *Audio/Video Settings* menu. Just like Easy Setups, here also there are factory defined choices, plus you can create and make your own. When you have a set of presets you want to use again, you can store them as an "Easy Setup."

On the following pages we'll further review the *Easy Setups* menu and *Audio/Video Settings* Menu.

Easy Setups Menu

Both the Easy Setups menu item and the Audio/Video Settings menu item are located under the main *Final Cut Pro* menu.

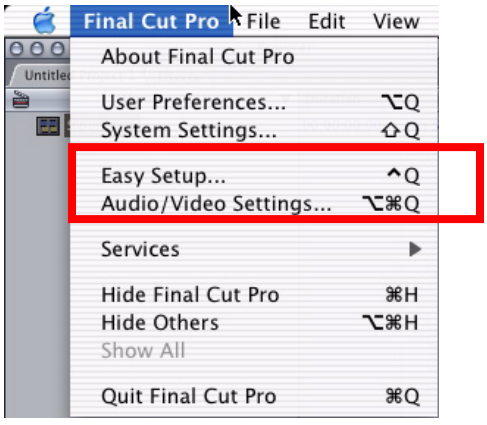

Easy Setup and Audio/Video Menu Items

Click on the Easy Setups menu item and Final Cut Pro will present the Easy Setup dialog window:

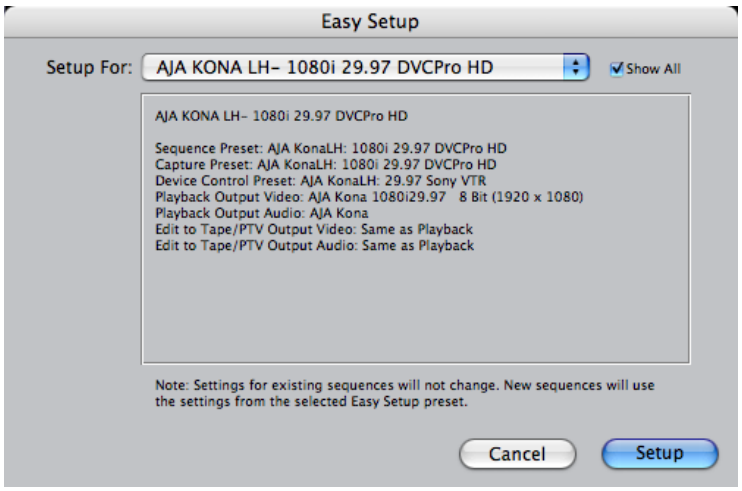

Easy Setup dialog

At the top of the Easy Setup dialog is the currently selected Easy Setup. It can be changed by clicking on the pulldown arrow at the right. Doing so results in a long list of the factory Easy Setups stored on the system. If you wish to see all of the Easy Setups, factory and user-defined, then ensure the "Show All" checkbox is marked at the right side of the dialog. By default, all AJA Easy Setups will be checked.

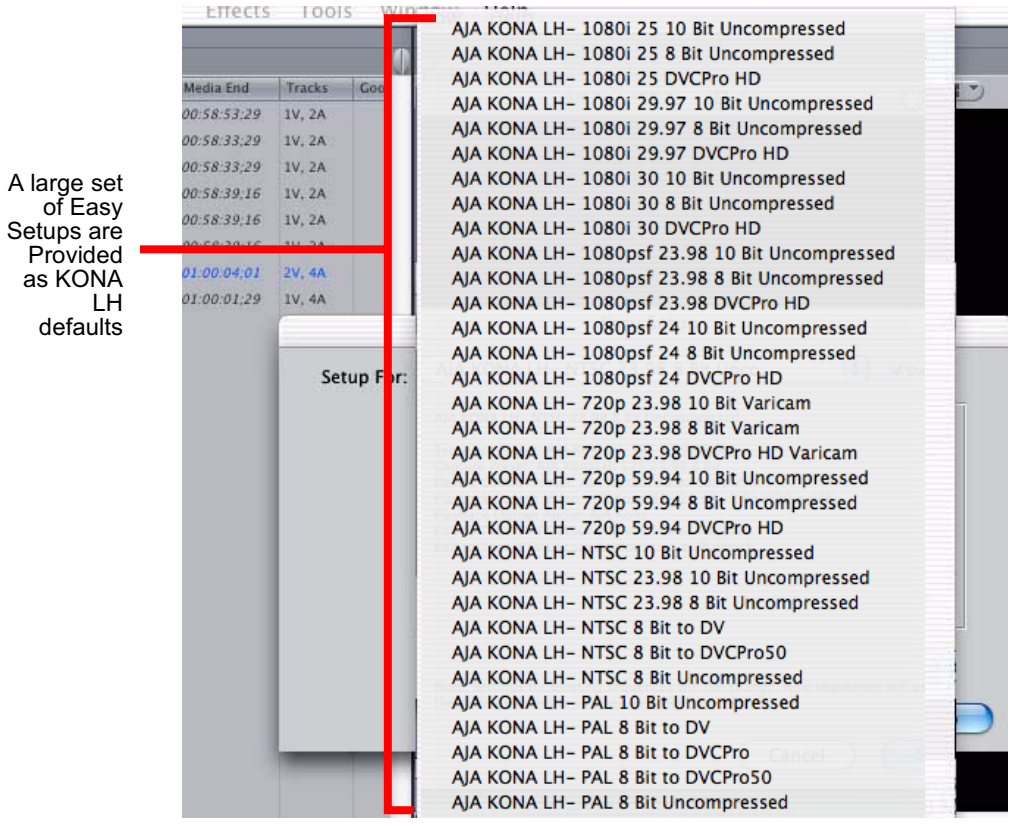

Factory Easy Setups

To choose a new Easy Setup from the list, click on the pulldown menu and select a desired choice. The choice won't take effect until you click the *Setup* button, but you will be able to see the description for the choice just by selecting it (without clicking the *Setup* button). Descriptions provide a paragraph summarizing what the Easy Setup is intended for and then each of the presets are explained (Sequence, Capture, Device, Playback Output, and Edit to Tape Video/Audio Outputs).

Easy Setups For Use With KONA LH

The factory default Easy Setups currently shipped with KONA LH are shown below. Your list may differ as AJA is continually improving and adding functionality.

Easy Setup (as listed in FCP Pulldown)	Description/Usage
AJA KONA LH- 720p 23.98 8-bit Varicam	AJA KONA LH- 720p 23.98 8-bit Varicam
AJA KONA LH- 720p 23.98 10-bit Varicam	AJA KONA LH- 720p 23.98 10-bit Varicam
AJA KONA LH- 720p 23.98 DVCPRO HD Varicam	AJA KONA LH- 720p 23.98 DVCPRO HD Varicam
AJA KONA LH- 720p 59.94 8 bit uncompressed	AJA KONA LH- 720p 59.94 8 bit uncompressed
AJA KONA LH- 720p 59.94 10 bit uncompressed	AJA KONA LH- 720p 59.94 10 bit uncompressed
AJA KONA LH- 720p 59.94 DVCPRO HD	AJA KONA LH- 720p 59.94 DVCPRO HD
AJA KONA LH- 1080i 25 8 bit uncompressed	AJA KONA LH- 1080i 25 8 bit uncompressed
AJA KONA LH- 1080i 25 10 bit uncompressed	AJA KONA LH- 1080i 25 10 bit uncompressed
AJA KONA LH- 1080i 25 DVCPRO HD	AJA KONA LH- 1080i 25 DVCPRO HD
AJA KONA LH- 1080i 29.97 8 bit uncompressed	AJA KONA LH- 1080i 29.97 8 bit uncompressed
AJA KONA LH- 1080i 29.97 10 bit uncompressed	AJA KONA LH- 1080i 29.97 10 bit uncompressed
AJA KONA LH- 1080i 29.97 DVCPRO HD	AJA KONA LH- 1080i 29.97 DVCPRO HD
AJA KONA LH- 1080i 30 8 bit uncompressed	AJA KONA LH- 1080i 30 8 bit uncompressed
AJA KONA LH- 1080i 30 10 bit uncompressed	AJA KONA LH- 1080i 30 10 bit uncompressed
AJA KONA LH- 1080i 30 DVCPRO HD	AJA KONA LH- 1080i 30 DVCPRO HD
AJA KONA LH- 1080psf 23.98 8 bit uncompressed	AJA KONA LH- 1080psf 23.98 8 bit uncompressed
AJA KONA LH- 1080psf 23.98 10 bit uncompressed	AJA KONA LH- 1080psf 23.98 10 bit uncompressed
AJA KONA LH- 1080psf 23.98 DVCPRO HD	AJA KONA LH- 1080psf 23.98 DVCPRO HD
AJA KONA LH- 1080psf 24 8 bit uncompressed	AJA KONA LH- 1080psf 24 8 bit uncompressed
AJA KONA LH- 1080psf 24 10 bit uncompressed	AJA KONA LH- 1080psf 24 10 bit uncompressed
AJA KONA LH- 1080psf 24 DVCPRO HD	AJA KONA LH- 1080psf 24 DVCPRO HD
AJA KONA LH- NTSC 8 bit uncompressed	Use this preset when working with 625 at a 29.97 framerate. Material will be processed as Uncompressed 8-bit.
AJA KONA LH- NTSC 10 bit uncompressed	Use this preset when working with 625 at a 29.97 framerate. Material will be processed as Uncompressed 10-bit.
AJA KONA LH- NTSC 8 bit to DV	Use this preset when working with 625. Material will be processed as DV.
AJA KONA LH- NTSC 8 bit to DVCPro50	Use this preset when working with 625. Material will be processed as DVCPro50.
AJA KONA LH- NTSC 23.98 8 bit uncompressed	Use this preset when working with 625 at a 23.98 framerate. Material will be processed as Uncompressed 8-bit.
AJA KONA LH- NTSC 23.98 10 bit uncompressed	Use this preset when working with 625 at a 23.98 framerate. Material will be processed as Uncompressed 10-bit.
AJA KONA LH- PAL 8 bit uncompressed	Use this preset when working with 525 at a 29.97 framerate. Material will be processed as Uncompressed 8-bit.
AJA KONA LH- PAL 10 bit uncompressed	Use this preset when working with 525 at a 29.97 framerate. Material will be processed as Uncompressed 10-bit.
AJA KONA LH- PAL 8 bit to DV	Use this preset when working with 625. Material will be processed as DV.
AJA KONA LH- PAL 8 bit to DVCPro	Use this preset when working with 625. Material will be processed as DVCPro.
AJA KONA LH- PAL 8 bit to DVCPro50	Use this preset when working with 625. Material will be processed as DVCPro50.

Easy Setup (as listed in FCP Pulldown)	Description/Usage
AJA KONA LH- PAL 23.98 8 bit uncompressed	Use this preset when working with 525 at a 23.98 framerate. Material will be processed as Uncompressed 8-bit.
AJA KONA LH- PAL 23.98 10 bit uncompressed	Use this preset when working with 525 at a 23.98 framerate. Material will be processed as Uncompressed 10-bit.

Audio/Video Settings Menu

The Audio/Video Settings menu in Final Cut Pro contains a series of tabbed windows where you define the presets in specific categories such as A/V devices or in what format media is captured. When you open the Audio/Video Settings window, it shows a summary of the currently selected Easy Setup. Other tabbed windows are available with greater details about each category. On the initial summary window you can see the selected presets for the Easy Setup as well as change specific presets.

The presets you can change on the Summary window are:

Sequence Preset—select one of these as the editing timebase for new sequences. If you make a change to Sequence Presets, the change will only take effect on any new sequences you create—currently active sequences will not see the change.

Capture Preset—select one of these to set the incoming source format you'll be capturing. Ideally select the maximum quality format you'll be using for most of the material so there will be no need to re-render later as clips are added from the bin to the sequence.

Device Control Preset—select the AJA Video KONA LH device (NTSC or PAL as desired). This tells Final Cut that the KONA LH will control the VTR attached to KONA LH or KL-Box.

A/V Devices (Audio and Video Playback)—select the KONA LH as video and audio playback devices for Final Cut and the format to be output.

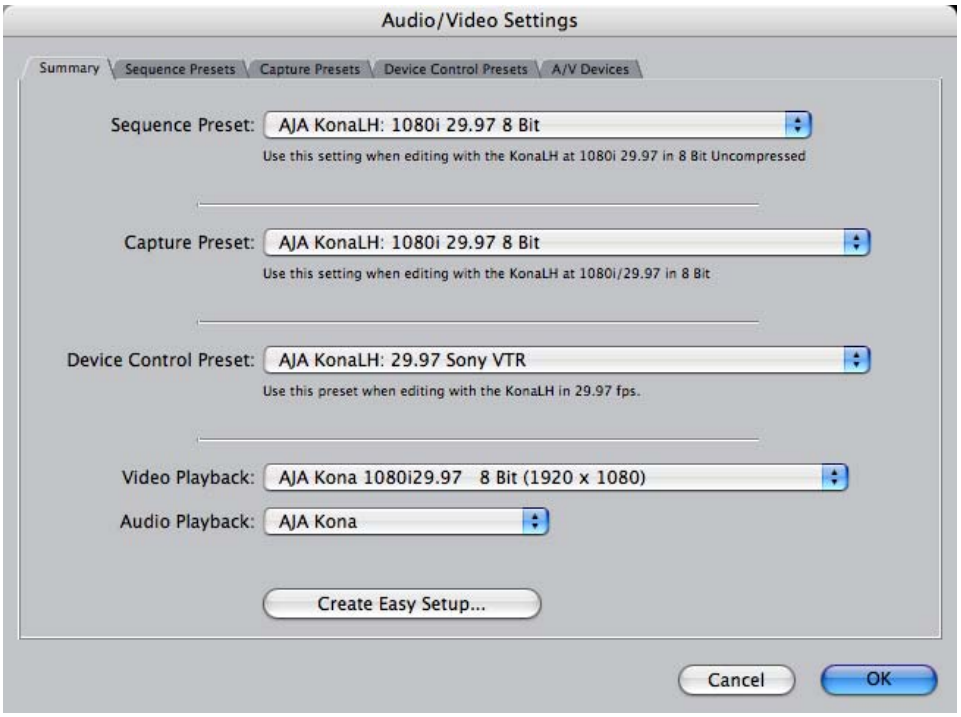

Audio/Video Settings, Summary Window

To Create A New Easy Setup

If you have a group of presets that you'd like to use continually, then you can create a new Easy Setup by modifying the settings of the Easy Setup currently selected (pick one most like the one you want to create) and then saving it under a new name:

1. Change the currently selected Easy Setup by making changes at the Summary tabbed window via the pulldown menus.
2. When everything is set as desired, click on the *Create Easy Setup* button at the bottom of the Summary window.
3. A new dialog will pop up. Enter a descriptive name for the new Easy Setup (i.e., 10-bit SDI from Video Server) in the *Name* field.
4. Enter a sentence or two describing what is unique about the Easy Setup in the *Description* field.
5. Click the *Create* button to store the new Easy Setup.

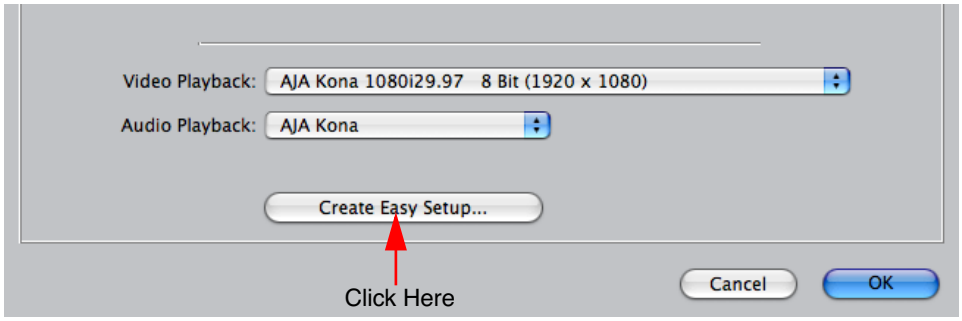

Audio/Video Settings, Creating a New Easy Setup

At any point in the above procedure you can go to the other tabbed windows and make additional changes. For example, in the Sequence Presets, Capture Presets, and Device Control Presets windows you can select a preset and click on an *Edit* button to change specific aspects of the preset. As an example, under *Device Control Preset* you might wish to change the Time Source on your VTR from LTC to VITC, or change the pre-roll and post-roll values. When you save a Setup, it defaults to saving in the Final Cut Pro *Custom Setups* folder.

Each of the tabbed preset screens are described on the following pages for your convenience. For more information, please read the Final Cut Pro user documentation.

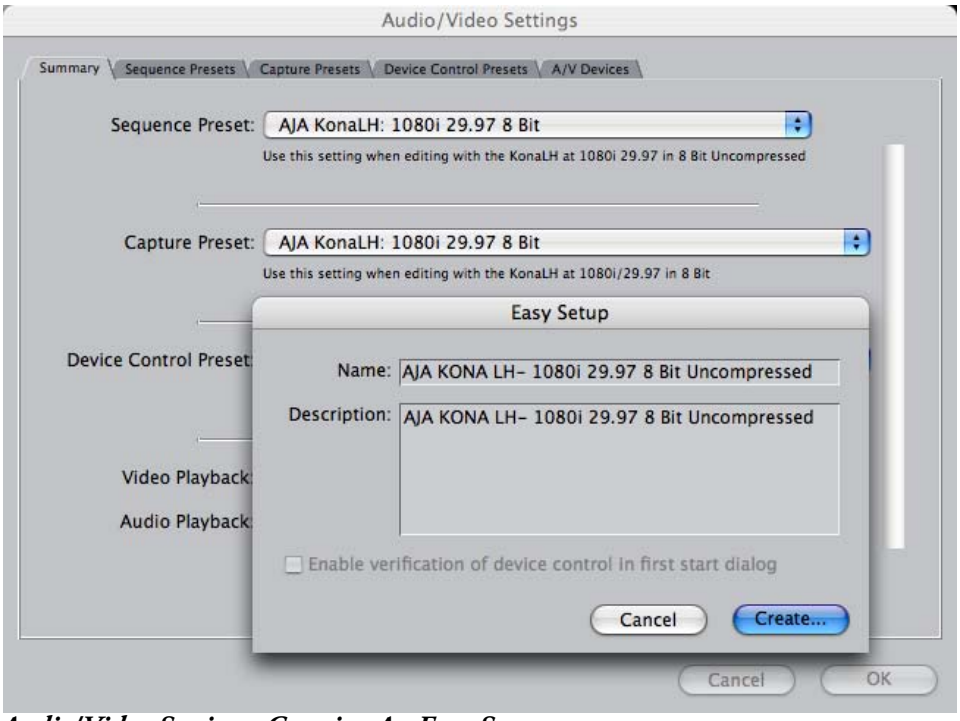

Audio/Video Settings, Creating An Easy Setup

The Sequence Presets Window

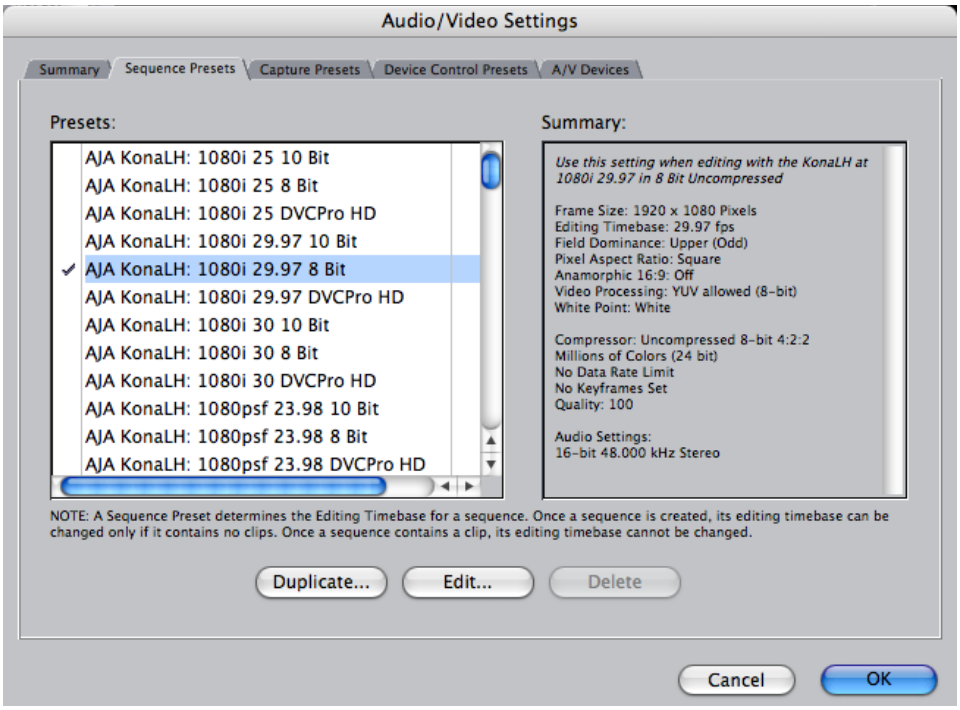

Audio/Video Settings, Sequence Presets Window

This window allows you to select an editing timebase for the current sequence. Once you add a clip to the sequence this cannot be changed.

For example, once you've selected uncompressed 10-bit NTSC 48 kHz, you then have to stay in that timebase and can't switch to another. By clicking in the leftmost column (see the checkmark in the sample screen above), you select a new Sequence Preset for use. The checkmark tells which Preset is in use—highlighting a choice alone does not select it.

If you select an editing timebase you can then edit it (click the Edit button) or copy and rename it as another (click Duplicate). When editing a timebase you can change the following:

- Select video processing properties (how to render)
- Frame size and aspect ratio
- Pixel aspect ratio
- Field dominance (none, upper, or lower)
- Editing timebase
- Set QuickTime video codec settings (quality and type)
- Select audio sample rate

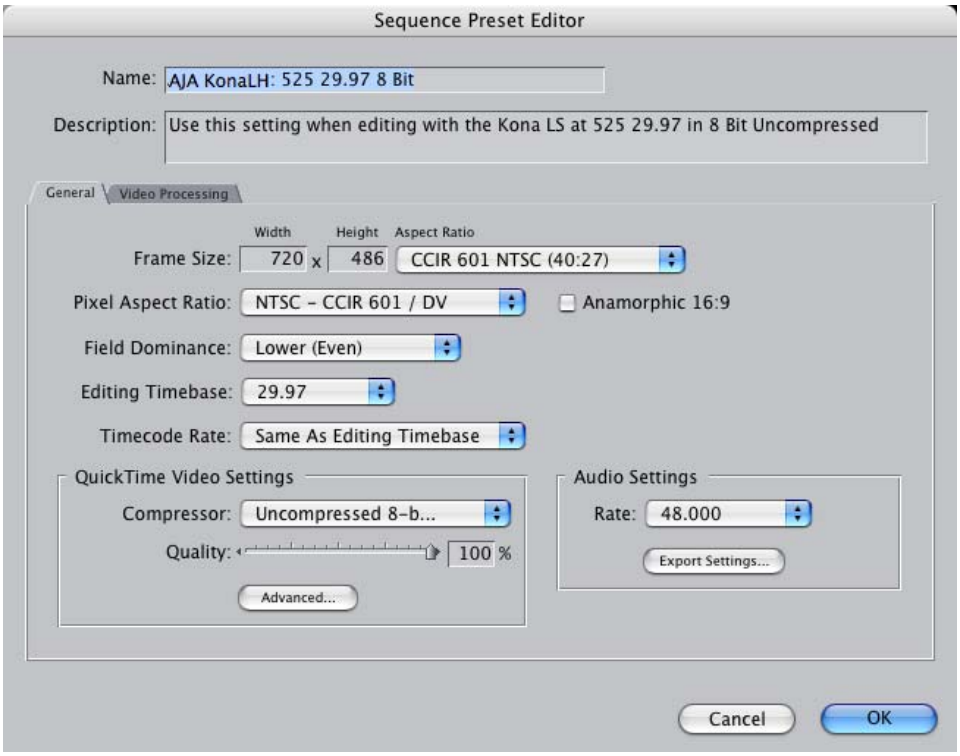

Audio/Video Settings, Sequence Presets Editor Window

The Capture Presets Window

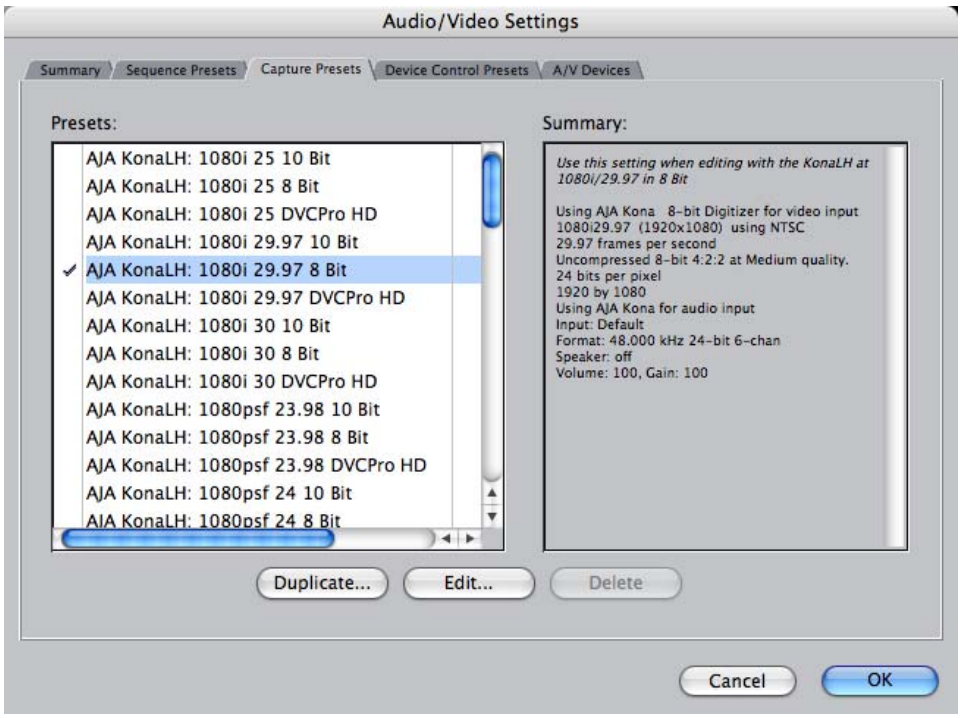

Audio/Video Settings, Capture Presets Window

This window lets you choose a preset format for incoming source video and audio media you'll be capturing. Select the maximum quality format you'll be using for most of the material so there will be no need to re-render later. The information on the right window pane describes the preset and all it's parameters. If you select a format by making a checkmark in the left column, you can edit it (click the Edit button) or copy and rename it as another (click Duplicate). The only exceptions to this are those presets marked with a lock icon; those can be duplicated, but when you try to edit one the system reports they're locked and can only be copied (it will create the copy for you when you try to edit).

Factory AJA presets are easily identified by "AJA" at the beginning of their name.

Since Capture Presets will be used frequently as you bring media into KONA LH, we'll discuss the edit screen next.

Capture Presets Editing

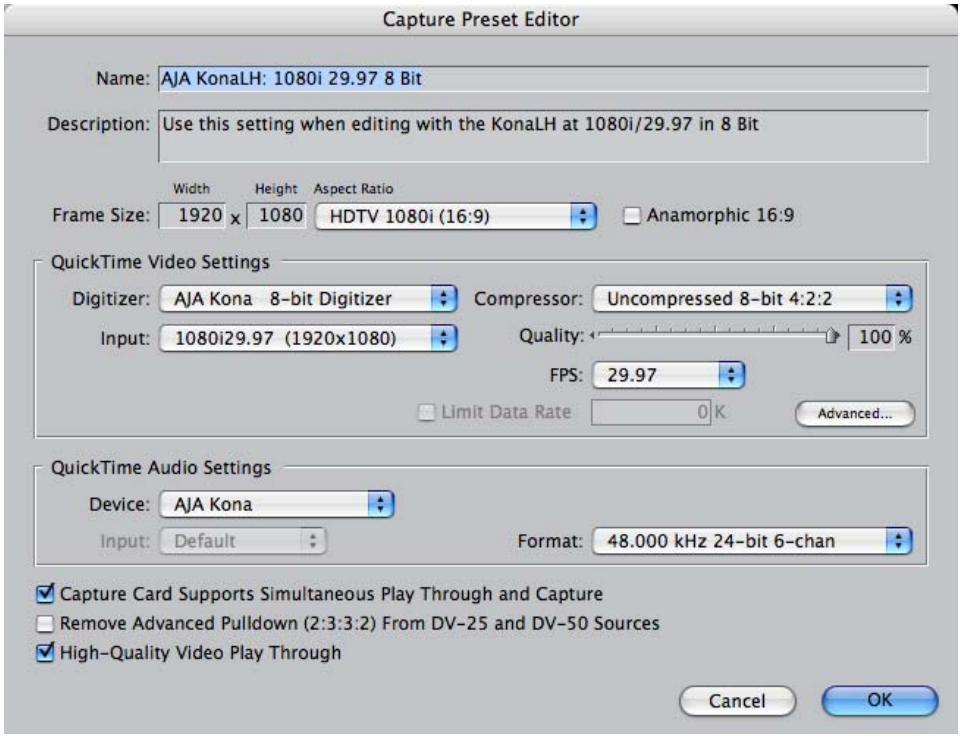

Audio/Video Settings, Capture Presets Editing Window

Note: Whenever a Preset is being copied as the basis of a new preset, always change the name and description to fit the new preset so users aren't confused between it and the original.

Frame Size—below the name and description are the frame size settings. These can be changed via the pulldown menu. Selecting a new *Aspect Ratio* value also changes the values in the width and height fields.

QuickTime Video Settings—these settings select a video input source and affect how it's processed by Final Cut Pro. The *Digitizer* pull-down menu selects whether you want the selected input source to be digitized as 8-bit or 10-bit uncompressed video as it comes into KONA LH. The *Input* pull-down selects the primary format KONA LH will use to capture input video. The *Compressor* pull-down selects a codec that tells Final Cut how to process the video; the codec selected should be chosen for compatibility with the Digitizer setting selected. For example, if your Digitizer setting is 10-bit Uncompressed, then the Compressor

setting should be one of the 10-bit choices available. The *Quality* slider should be set to 100 percent when capturing uncompressed; for other formats use an appropriate quality level. Set the *FPS* (Frames Per Second) setting to the correct frame rate. The *Advanced* settings button opens a new screen providing choices of codec-specific options. For uncompressed codecs these probably are not unneeded; for other codecs choose the options desired.

QuickTime Audio Settings—these settings select an audio input source and affect how it's processed by Final Cut Pro. The *Device* pull-down should be set to AJA Kona. The *Input* pull-down selects that KONA LH (AJA Kona) will be used for capturing audio—it does not select the specific inputs. For specific audio input selection use the KONA LH Control Panel. The *Rate* pull-down selects a sample rate; it should always be set to 48 kHz for KONA LH. By clicking on the *Advanced* button, a new screen will be displayed where you can select between 8- and 16-bit sampling—AJA recommends 16-bit for optimum sound quality. (This has nothing to do with input format, as KONA LH supports 20-bit SD embedded audio, and 24-bit AES audio.)

The Device Control Presets Window

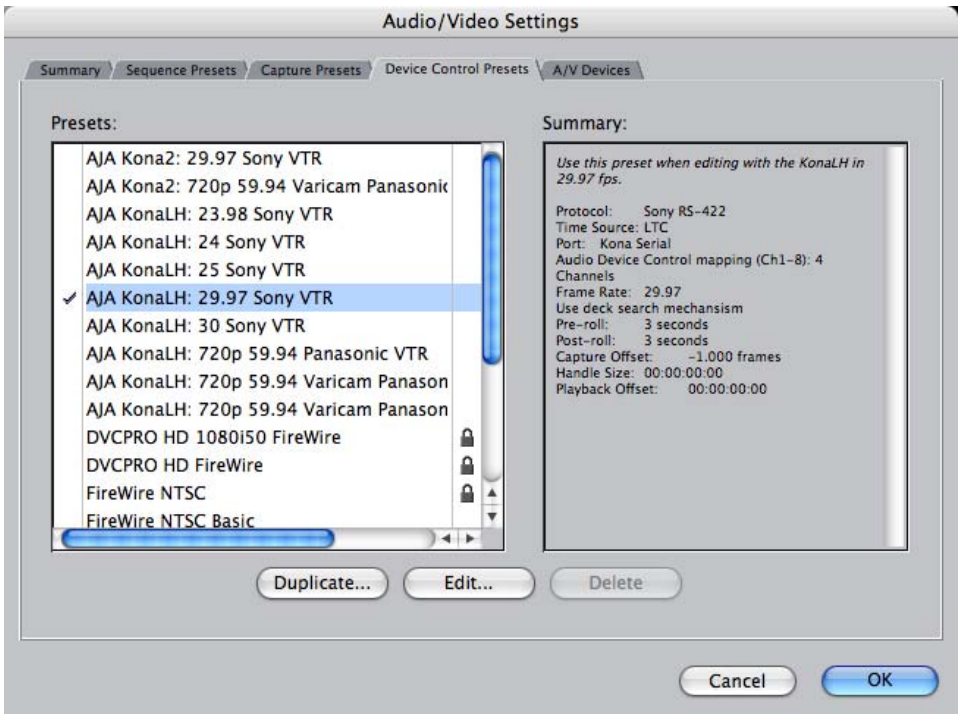

Audio/Video Settings, Device Control Presets Window

This window selects machine control parameters for an attached VTR. Your choice here tells Final Cut that KONA LH is handling the machine control parameters for the VTR attached to KONA LH. Alternatively, you could also select a different device for input/output instead of KONA LH; for example, if you have a IEEE 1394 camcorder attached to the Power Mac's FireWire port you might choose "FireWire NTSC." The information on the right window pane describes the current

machine control settings and parameters for the VTR attached. For KONA LH presets this means the VTR attached at the RS422 port on KONA LH. For non-KONA LH presets, this means camcorder/VTRs attached directly at the FireWire port or via some other interface.

If you select a preset you can edit it (click the Edit button) or copy and rename it as another (click Duplicate). The only exceptions are those presets marked with a lock icon; those can be duplicated, but when you try to edit one the system will report they're locked and can only be copied (it will create the copy when you try to edit).

When editing a Device Control preset you can change the following:

- Name and description of Device Control preset
- Protocol for capture/playback VTR (for KONA LH this will be RS422)
- Audio Mapping
- Time Source (LTC/VITC/both/etc.)
- Port
- Frame Rate
- Default Timecode (Drop Frame etc.)
- Capture/Playback Offsets (to correct for VTR versus Final Cut timing issues)
- Handles/Pre-roll/Post-roll
- Auto Record and PTV

KONA LH ships with VTR Device Control Presets for Sony and Panasonic VTRs. Select a Device Control Preset for the desired frame rate. Presets for both Sony and Panasonic VTRs are provided with these frame rates: 23.98, 24, 25, 29.97, and 59.94.

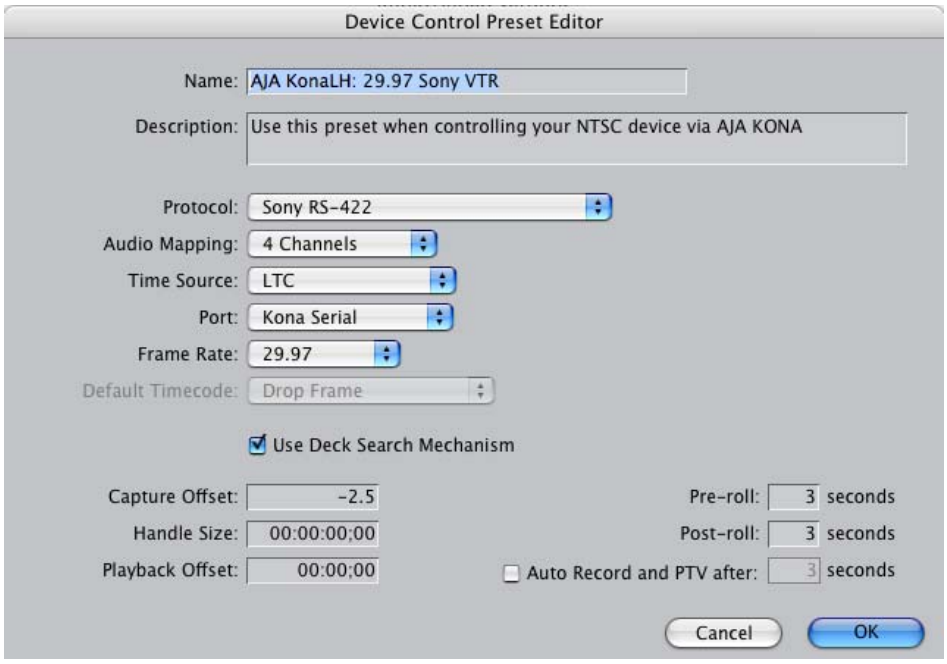

Audio/Video Settings, Device Control Presets Editor Window

The A/V Devices Window

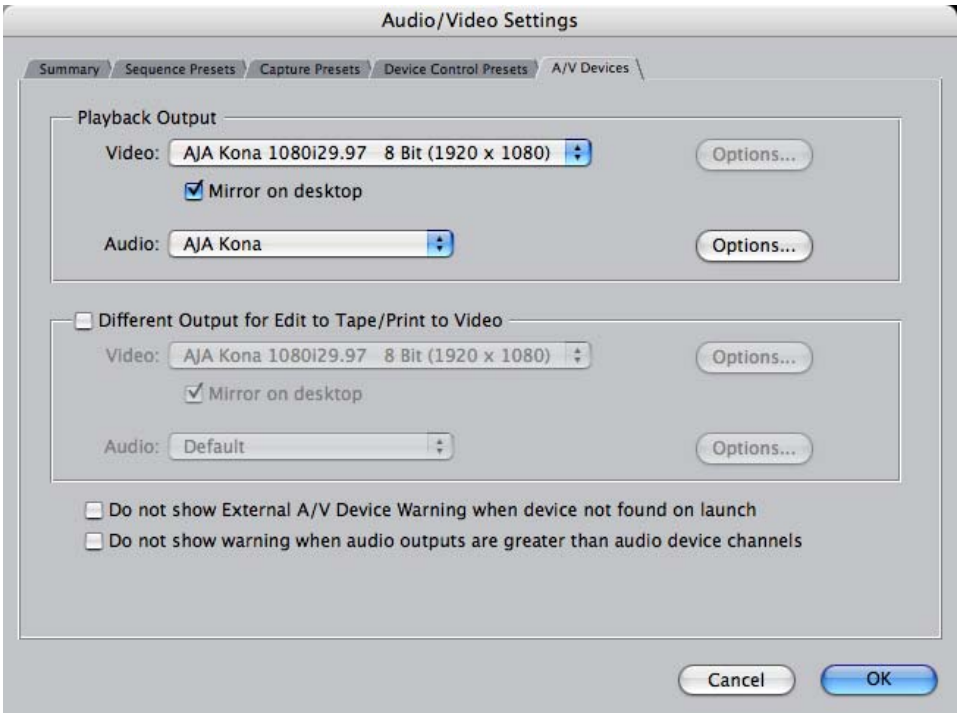

Audio/Video Settings, A/V Devices Window

The A/V Devices window selects the current playback device for both audio and video. Typically, you'll select KONA LH for both playback devices. The format chosen determines the Primary format for the KONA LH board during playback. The Video *Options* button is greyed out for KONA LH (use the KONA LH Control Panel for video configuration; the Audio *Options* button opens a second dialog where Final Cut gives options for changing bit depth, number of channels, and the sample rate. Since Final Cut currently only supports 2 channels of audio, AJA recommends you leave all of these settings as set in the factory defaults.

You may wish to use a different KONA LH output for final Print-to-tape from Final Cut. You can select that in this window by clicking the checkbox "Different Output for Edit to Tape/Print to Video." This allows you to select via a pull-down menu any KONA LH video output and audio output.

The window also allows you to turn on and off device and audio output warnings.

Checking the System with a Simple Test Project of Bars and Tone

To test that you've installed the KONA LH drivers and have audio and video monitoring correctly configured, try creating a simple Final Cut Pro project with bars and tone.

1. Select an Easy Setup as previously discussed (go to the Final Cut Pro menu and select *Easy Setup*; then select a desired preset).
2. Select *New Project* from the File menu.

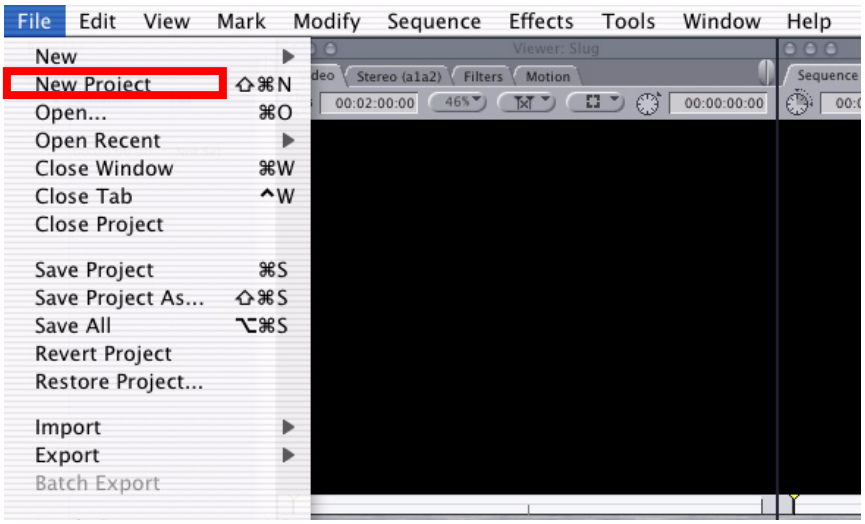

Create a New Project

3. The Sequence window will be at the bottom of the screen and a Browser window will be at the top left. Look at the Browser window and locate the "Effects" tab at the top right. Click on it.
4. Locate the Viewer window in Final Cut and click on the Filmstrip pulldown menu button (it's a "filmstrip" icon with an "A" on it). Select "Bars and Tone NTSC" or "Bars and Tone PAL". The viewer window will display bars after you do this.
5. Click the mouse cursor on the Bars and Tone in the Viewer window and drag it to the beginning of the sequence window. You'll see the bars and tone show up on the sequence where it can be played.
6. Go to the beginning of the sequence by clicking on the left-most icon and then click the "Play" icon. You should see and hear the bars and tone on your video monitor and audio monitoring system.

If you don't see bars on the external video monitor and hear tone, check your connections and ensure KONA LH is selected in the Easy Setups and Audio/Video Settings as necessary.

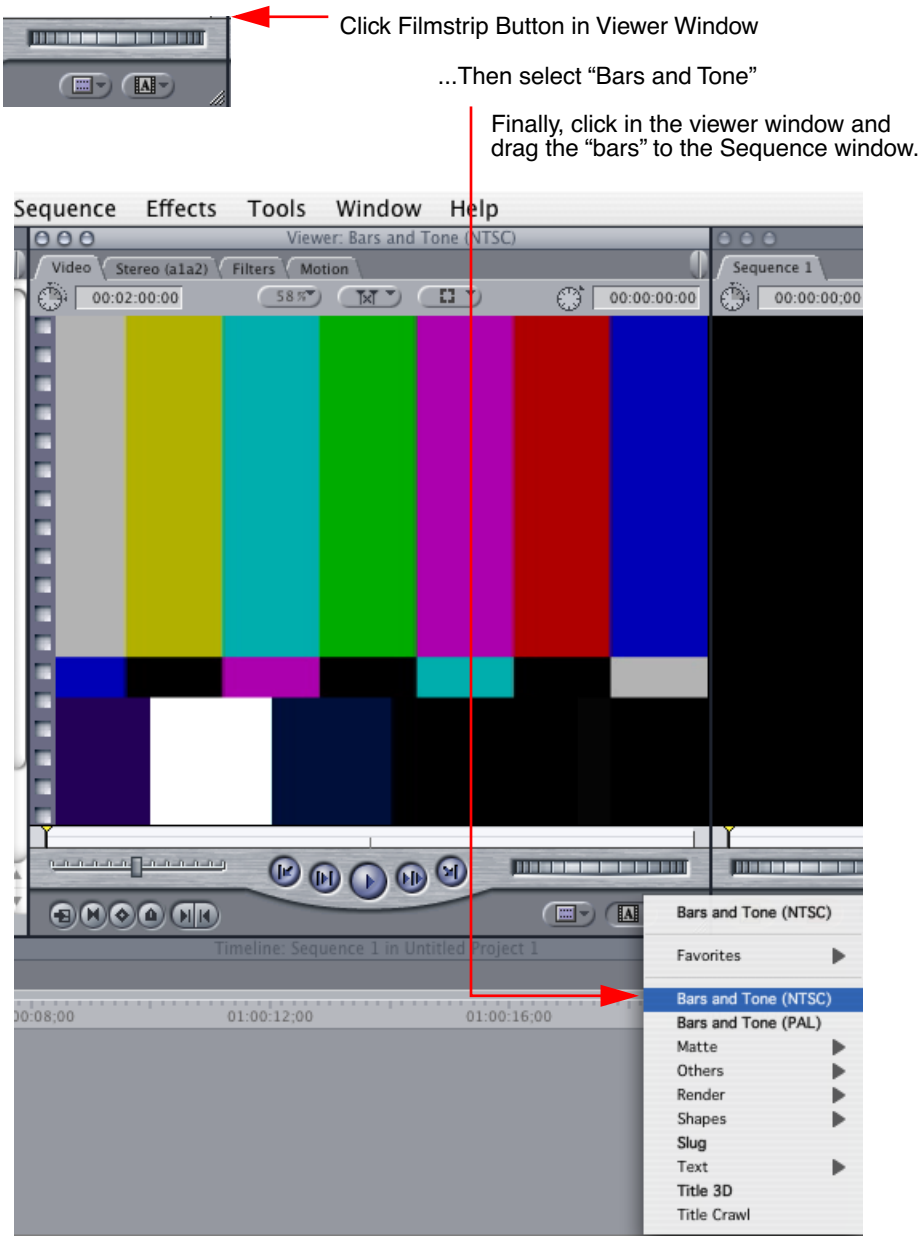

Click and Drag Bars and Tone From Viewer Window To Sequence

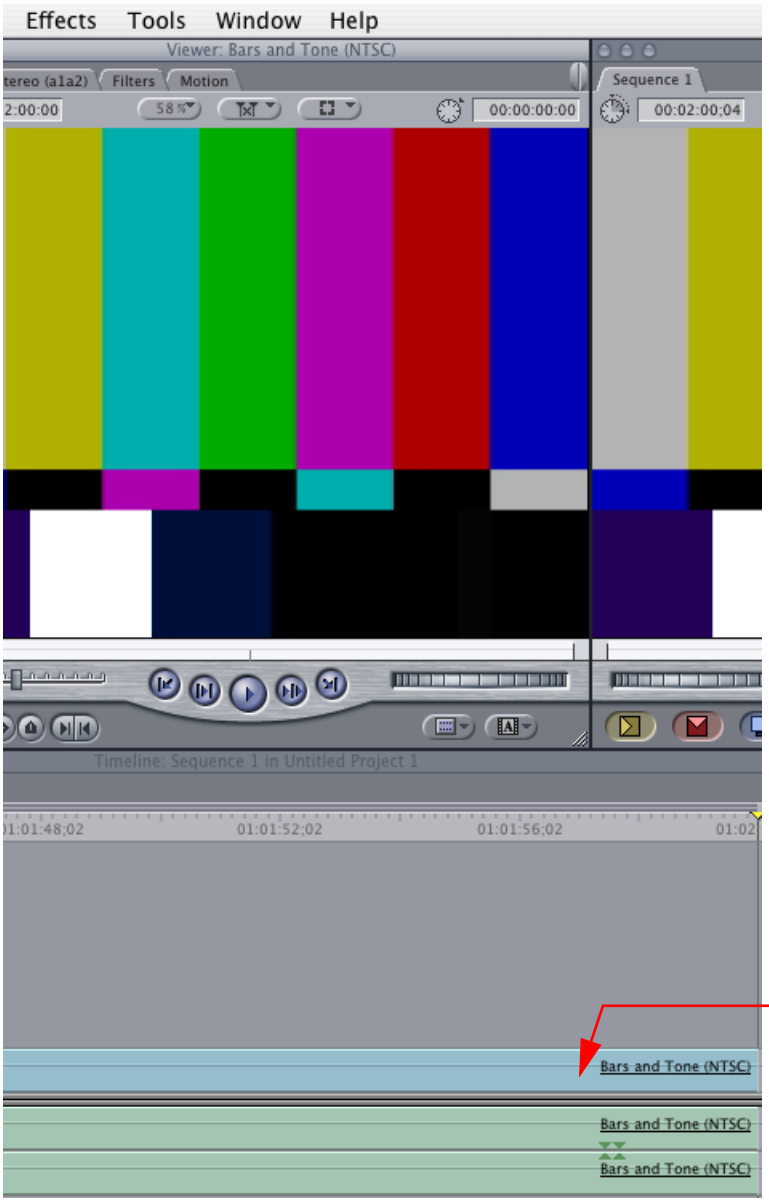

Sequence Window Showing Bars and Tone Clip Dragged from Viewer

If everything works properly, go ahead and try capturing audio and video media from your VTR.

Using 8-bit Versus 10-bit Video

While both 8- and 10-bit uncompressed video are capable of providing excellent quality broadcast video, 10-bit represents a significantly higher quality and is preferable in many situations.

Because 10-bit video has four times the numerical precision when compared to 8-bit, it has a signal-to-noise ratio 12 db higher than 8-bit video.

Visually, in 8-bit video compared to 10-bit video, you will notice a substantial difference. In 8-bit video there will be “contour lines” or “striations” visible, particularly noticeable in scenes having soft gradients like a ramp or sunset. For example, if a sky region is mostly the same color but varies by only a few digital numbers from one side of the picture to another, you may see contour lines where the signal passes from one digital value to the next higher value.

Since each numerical value in a 10-bit system is only one fourth as large as an 8-bit system's, these contours become invisible and the sky varies smoothly.

10-bit video is often used when the source and output video (or “master”) is also 10-bit. Even if the input and/or output video is 8-bit, a 10-bit “project” will still maintain a higher quality when there is a significant amount of effects rendering involved.

Industry standard professional mastering formats—Sony Digital Betacam for Standard Definition and Panasonic D5 for High Definition—are both true 10-bit formats.

Chapter 5: Troubleshooting

If You Run Into Problems

One useful way to find the source of problems is to isolate your system to the smallest size where the problem still occurs and then note all the symptoms. This serves to eliminate areas not involved in the problem and makes finding the problem easier.

Once you've noted problem symptoms, look through the following table and see if any of the symptoms are listed. If so, check the items listed. If you later need to call for customer service, let them know all of the things you've tried and when and how the symptoms appeared.

Table 5-1. ***Problem Solving by Matching Symptoms to Remedies***

Symptom	Check
Disk RAID cannot keep up (dropped frames etc.).	Ensure the disk system is providing at least 50 MB/second sustained transfer rate
Dropped frames during playback.	1. Canvas/Viewer zoom setting exceeds the fit-to-window setting. Change to "Fit-to-Window." 2. RAID cannot sustain the data rate of the clip/sequence. 3. The sequence setting does not match the "playback output setting" found at FCP Audio/Video Settings -> AV Output. 4. Virus checking software running in the background (disable it). 5. Scratch drive not set to the RAID.
Dropped frames during record.	1. RAID cannot sustain the data rate of the capture preset codec. 2. Virus checking software running in the background (disable it). 3. Scratch drive not set to the RAID.

Table 5-1. ***Problem Solving by Matching Symptoms to Remedies***

Symptom	Check
Media is not being captured from desired external device.	Check the settings in the *Input* tab of the KONA LH Control Panel application. Also check equipment cables.
Dropped frames during playback	Look for scroll bars in the viewer or canvas as a warning sign that the zoom setting exceeds the fit-t-window.
Changes made to Final Cut's configuration aren't remembered or you need to force a change to them.	Under some circumstances, Final Cut Pro may need to be initialized back to the factory default state as it was when you installed it. The easiest way to do this is to locate Final Cut's preference file and discard it. To do so, follow this procedure: 1. Locate the file named "Final Cut Pro x.x Preferences". *Note: path to file is "Macintosh HD/users/username/library/preferences/final cut user data."* 3. Click and drag that file to the Trash Can icon and drop it there. When you next start up Final Cut Pro, it will present the "Choose Setup" prompt (as in initial installation) where you can again choose a desired KONA LH input format in the "Setup For" pulldown and re-enter a desired system scratch disk (your RAID).
Video in the canvas stays frozen during playback.	1. The sequence setting does not match the "playback output setting" found at FCP Audio Video Settings -> AV Output. 2. Canvas/Viewer zoom setting exceeds the fit-to-window setting. Change to "Fit-to-Window."
Video output is black.	1. External video is set to "No Frames" (View -> External Video). 2. The "Playback output setting" found at FCP Audio Video Settings -> AV Output is set to "none" or to a non-KONA LH device.
Video stutter during playback.	RAID cannot sustain data rate.
Red render bar occurs when placing a clip on a sequence.	The sequence setting does not match the clip setting.

Updating Software

Check on the AJA Video website (www.aja.com/support_kona.html) for software updates. If any are available, download the file and read any associated instructions prior to installing the software.

Support

When calling for support, first check over your system configuration and ensure everything is connected properly and that current Final Cut presets and Easy Setups match what you are trying to do. Even if you cannot find the cause of the problem, having this information at hand will help when you call Apple or AJA Customer Support for help.

If the problem is unknown or you need general help, first contact the dealer where you purchased the product. AJA dealers offer product support for many service requirements.

If the problem is a Final Cut Pro operational issue, Power Mac system issue, or Xserve RAID issue, then call Apple Customer Support for help.

If the problem is an AJA Video KONA LH issue, then contact AJA Video Customer Support using one of the methods listed below:

Contacting by Mail Address:

443 Crown Point Circle, Grass Valley, CA. 95945 USA
Telephone: 1.800.251.4224 or 1.530.274.2048
Fax: 1.530.274.9442

Web: http://www.aja.com
Support Email: support@aja.com

Apple Resources

Apple provides a large amount of support information online at their support website. Information provided includes answers to top questions, discussions on specific topics, and software downloads for updates and utilities.

You may also enroll in AppleCare for extended support of hardware and software products. Information is provided on the Apple Support website on how to enroll in AppleCare.

General Apple Support Website for information on all products:
http://www.info.apple.com/

Power Mac Support Area: http://www.apple.com/support/powermac/

Final Cut Pro Web Support: http://www.info.apple.com/usen/finalcutpro/

Final Cut Discussion Area:
http://www.apple.com/support/finalcutpro/

Appendix A: Specifications

Formats

525i 29.97
625i 25
720p 59.94
720p 60
1080i 25
1080i 29.97
1080i 50
1080psf 23.98
1080psf 24

Video Input

Digital: 8 or 10 bit HD-SDI/SDI, SMPTE-259/292/296, Dual-rate

Analog:

Composite/S-Video (Y/C): NTSC, NTSCJ, PAL
12 bit A/D, 2x oversampling
3 line adaptive comb filter decoding
+/- .25 db to 5.0 MHz Y Frequency Response
+/- .25 db to 1 MHz C Frequency Response
.5% 2T pulse response
< 1.5% Diff Phase
< 1.5% Diff Gain

Component: SMPTE/EBU N10, Betacam 525 line, Betacam 525J, RGB
12 bit A/D, 2x oversampling
+/- .25 db to 5.5 MHz Y Frequency Response
+/- .25 db to 2.5 MHz C Frequency Response
.5% 2T pulse response
<2 ns Y/C delay inequity

Video Output

Digital: SD-SDI, SMPTE, 259M, 10-bits, BNC
HD-SDI SMPTE, 292/296, 10-bits, BNC

Analog:

Composite/S Video: NTSC, NTSCJ, PAL
12 bit D/A, 8x oversampling
+/- .2 db to 5 MHz Y Frequency Response
+/- .2 db to 1 MHz C Frequency Response
.5% 2T pulse response
< 1% Diff Phase
< 1% Diff Gain

SD Component: SMPTE/EBU N10, Betacam 525 line,
Betacam 525J, RGB
12 bit D/A, 8x oversampling
+/- .2 db to 5.5 MHz Y Frequency Response
+/- .2 db to 2.5 MHz C Frequency Response
.5% 2T pulse response
<1 ns Y/C delay inequity

Analog SD and HD Output, 12-bits, BNC:
HD: YPbPr, RGB
SD: YPbPr, RGB (component mode)
Composite/YC (composite mode)

Audio Input

Digital: 2-channel 24 bit AES/EBU, 48KHz sample rate
Synchronous or Non-synchronous
(Internal sample rate conversion)
24 bit SMPTE-259 SDI embedded audio, 8-ch, 48kHz synchronous

Analog: 2-channel balanced input
+24dbu Full Scale Digital
24 bit A/D, 48 KHz sample rate
+/- 0.2db 20 to 20 KHz Frequency Response

Audio Output

Digital: 2-ch 24-bit AES/EBU, 48 KHz sample rate
24 bit SMPTE-259 SDI embedded audio, 8-ch, 48 KHz synchronous

Analog: 2-channel Balanced output (XLR)
+24dbu Full Scale Digital (0dbFS)
24 bit D/A, 48 KHz sample rate
+/- 0.2db 20 to 20 KHz Frequency Response
2-channel unbalanced output (RCA-jack): requires KL-Box option

Down-Conversion

Hardware: 10-bit output, 24-bit internal processing
Anamorphic: full-screen
Letterbox: image is reduced with black top and bottom added to image area with the aspect ratio preserved
Crop: image is cropped horizontally

Reference Input

Analog Color Black or HD Tri-level
1 BNC on standard breakout cable (75 ohm terminating)
KL-Box (optional): 2 BNCs, passive loop-through

Hardware Acceleration Provided

DVCProHD hardware acceleration
HDV hardware acceleration
Dynamic RT Extreme hardware acceleration

Machine Control

RS-422, Sony 9-pin protocol Connector provided on KONA LH breakout cable and on optional KL-Box. 9-pin D-connector pinout is as follows:

1..... GND
2..... RX-
3..... TX+
4..... GND
5..... No Connection
6..... GND
7..... RX+
8..... TX-
9..... GND
Shell..... GND

Index

Symbols

.pkg 31

Numerics

10-bit video 80
48kHz audio 2
8-bit Versus 10-bit Video 80
8-channel 24-bit 48kHz AES 2
9-pin D-connector 3

A

A/V Devices 68
AES audio 2
AES/EBU 30
AES/EBU Audio Inputs 12
Analog 4 Channel Balanced/Unbalanced Audio 12
analog component 49, 55
analog composite 49, 55
Analog Format 49, 55, 56
Analog monitor output 12
Analog Out Screen 49
Analog Out Screen Settings 49, 55, 56
Apple Support 83
aspect ratio 71
ATA 6
ATA/IDE 7
Audio 2
Audio Input 43
audio input/output 29
Audio Inputs And Outputs 12
Audio Mapping 75
Audio, Monitor 55
Audio/Video Settings 64
Audio/Video Settings Menu 68

B

Balanced 12
Bars and Tone, sample FCP project 77
Betacam 13
Black 51
black burst 13
Black Level 55, 56
Block Diagram Screen 40
Blue 42
BNC Connectors 11
BNC connectors 11
BNCs for Audio 29
Box 3
Box Contents 24
Browser window 77

C

Cable Connections 10, 29
Cable connector descriptions 12
cables 24
cables, what's included 24
Cabling the System 29
camcorders 12
capacity 8
Capture Preset 68
CD 3
CD, KONA 2 Software 3
CD-ROM 31
Chassis 3
Chassis Connections 30
Checking the System 77
codec settings 71
codecs 18
Color Meanings, Control Panel 42
Component Analog Video Out 30
Component settings 49
Component video 12
Component/Composite 12
composite output 49, 55
Composite settings 49
Composite video 12
Configuration 31
configuring output timing 50
Connector Descriptions 12
Connectors 11, 12
connectors 29
Control Panel Basics 40
Control Panel Presets 60
Control Panel, AJA Software 3
Control Panel, KONA 2 39
Control Panel, Tabbed Screens 42
Control Screen 50
Control Screen Settings 50
Conversion Icons 41
Conversion Icons, Control Panel 41
Crop 47
customer service 81

D
data protection 8
DB9 12, 30
Default Kona Output 50
Device Control Preset 68
Digital Out Screen 47
Digital Out Screen Settings 47
Digital System 30
Disk Storage Solutions 6
Disk Utility 8
Down (Conversion) 46
down-convert, Control Panel 41
drivers 31
Drop Frame 75
Dual Link 48
DV (DV25) 19
DV50 19
DVCPRO HD 18
DVCProHD 19, 20, 21

E
Easy Setup (as listed in FCP Pulldown) 67
Easy Setups 64, 65
Easy Setups Menu 65
EBU N10 13
editing timebase 70
embedded audio 2

F
Factory Easy Setups 66
Features 6
features 2
Features, KONA 2 software 3
Fibre Channel 6
Field dominance 71
Final Cut Pro 4 3, 5, 39
Final Cut Pro and KONA 2 39
Final Cut Pro menu 65
Final Cut Pro™ 3
Final Cut Pro™ support 3
Format Screen Settings 46
format, primary 13
format, secondary 40
Formats and Transfer Rates/Storage Table 9
Formats Screen 45
formats, mixing and matching 21
Frame Rate 75
Frame Size 73
Frame size 71
Framebuffer 41
Freerun 52

G
G4 5
G5 28
Genlock 52
Genlock and Your System 36
Getting Help 82
Green 42

H
hard drives 7
Hardware 2
hardware and software requirements 5
HD editing 18
Hold Last Application 52
hot-swap 8
Hours of Storage 9
house reference 13
house reference sync 30
house sync 36

I
Icons 41
Icons, Control Panel 41
Info Screen 59
Input Pass through 51
Input Screen 43
Input Screen Settings 43
Input/Output 41
Installation Overview 23
Installation Software CD-Rom 3
Installer Screen 32
Installing Io Software 31
Installing the KONA 2 Card 25
Introduction, KONA 2 1
IRE 55

K
K-Box connector descriptions 12
K-Box, Front and Rear 11
key signal 47
KONA 2 Control Panel 39

KONA 2 Software 31
KONA 2 will synchronize program video 52

L
Limitations 6
Lock Input Audio Gain To Unity 55
Log On Authenticate Prompt 32
LTC 75
LUT 57

M
Machine Control 12
machine control parameters 75
Machine Control, pinout 3
Macintosh Desktop 51
Macintosh Desktop extension 50
Manual 13
minimum hardware and software requirements 5
minimums 6
Mirroring 7
Mixing and Matching Formats 21
Monitor Audio 55, 56
Monitor Out 12

O
Operating System 5
OS X installer files 31
OS X, version 10.25 5
output default, setting 50
output video black 51

P
packaging 4
Parity 7
PCI Slot Detail 28
PCI-Express slots 25
PhotoJPEG 19
pinout, RS-422 D-connector 3
Pixel aspect ratio 71
playback device 77
Post-roll 75
Pre-roll 75
Presets 60
presets 64
Presets, KONA 2 Control Panel 60
Primary 47
Primary Format 41
Primary format 13
Print-to-tape 77
problem symptoms 81
Problems, what to do 81
problems, what to do if you encounter 81

Q
QuickTime Audio Settings 74
QuickTime video 71
QuickTime Video Settings 74
QuickTime™ Drivers, AJA KONA 2 3

R
RAID 6, 7, 8
RAID 0 7
RAID 1 7
RAID 5 7
RAID 50 8
RAID controller 27
RAIDs 7
RCA connector pair, K-Box configuration 55
rear panel 12
Recommended System Requirements 5
Red 42
Ref In 52
Ref Loop 30
Reference Video 13
Requirements 5
Requirements, System 5
RGB 13
RP 188 definition 59
RP-188 58
RP-188 Timecode 58
RS422 12, 75
RS-422, Sony 9-pin protocol. 9-pin D-connector pinout 3

S
sample rate 71
Sample rate conversion 3
Save Preset.. 60
Scenarios, workflow 17
SCSI RAID 6, 7
SDI cables 30
SDI embedded audio 2
SDI Input and Outputs 12
Secondary 47

Sequence Preset 68
Sequence window 77
set up 23
Settings 65
shipping 24
Shipping Box Contents 4
Slot Detail 28
SMPTE protocol 12
SMPTE RP 188 59
snapshot, Control Panel settings 60
Software 3
Software CD 31
software files that have been installed 59
Software For Striping 8
Software License Agreement Screen 33
Software on a PowerMac G4 or Xserve Server 31
software requirements 5
software updates 82
software, 3rd-party 39
Sony 12
Standard Cables 10
Storage 5
Storage capacity 8
Storage Methods 6
Storage Requirement Table 9
Storage Solutions 6
Striping 7
Striping data 7
Support 83
support 83
Support, 3rd-party software 3
Symptoms and remedies 81
Symptoms, problem 81
sync generator 13
synchronize program video 52
synchronizing other video equipment 13
system configuration, Control Panel 40
System Connections 30
system interconnections 30
System software 31

T

Tabbed Windows 42
Time Source 75
timebase 71
Timecode 75
Timecode Offset 59
Timecode Screen 58
Timecode Screen Settings 58
Timing adjustment, Control Panel 52
Transfer Rate 9
Transfer Rate Table 9
Troubleshooting 81
troubleshooting 81
typical system interconnections 30
Typical Workflows 18

U

Uncompressed 10-bit 21
Uncompressed 8-bit 21
uncompressed media 6
unpack 3
Unpacking 24
Up (Conversion) 46
up-convert, Control Panel 41
Updating Software 82
user and password 32
User Bits, RP-188 58
Using K-Box 11
Utility, disk 8

V

video and audio input/output connections 29
Video Format 46
Video Input 43, 1
video key 47
Video Monitor 30
Video Output 2
video path 41
video processing properties 71
Video+Key 47
Video/Audio connections 29
VITC 75
VTR 30, 75
VTR RS-422 Control Port 12
VTRs, 12

W

Workflow 17
Workflow General Notes 21

X

Xserve and Xxerve RAID 6

Xserve RAID 6, 8

Y

Y/R-Y/B-Y 13
Yellow 42
YPbPr 13
YUV 13